SOLID-STATE-LIGHTING TECHNOLOGY ISSUE

Information DISPLAY

Official Monthly Publication of the Society for Information Display • www.informationdisplay.org

January 2010
Vol. 26, No. 1

The Transition to Solid-State Lighting

LATEST LED TECHNOLOGY AND PRODUCT DEVELOPMENTS FOR THE LIGHTING AND DISPLAY INDUSTRIES

NEXT-GENERATION SOLID-STATE-LIGHTING TECHNOLOGY

RESIDENTIAL, INDUSTRIAL, AND INSTITUTIONAL APPLICATIONS

NEW LED DRIVER DESIGNS FOR FUTURE APPLICATIONS

Plus

Journal of the SID
February Contents

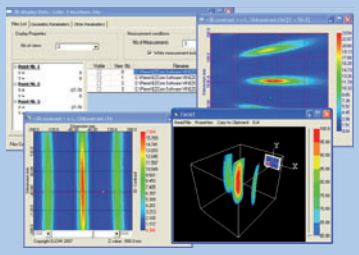

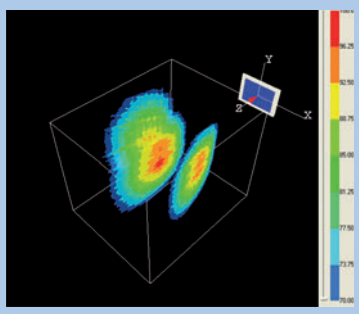

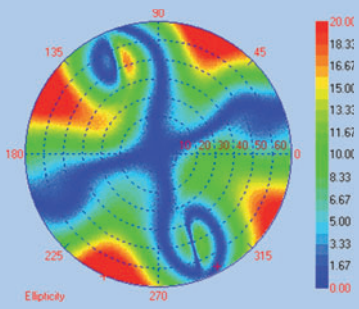

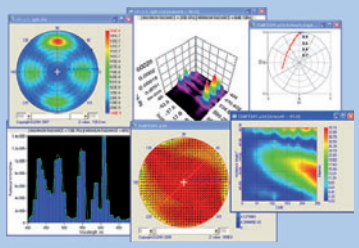

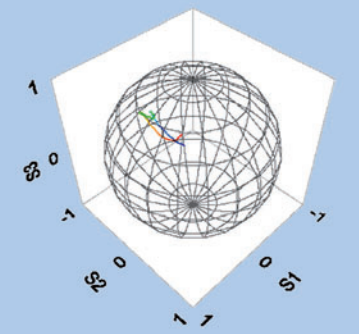

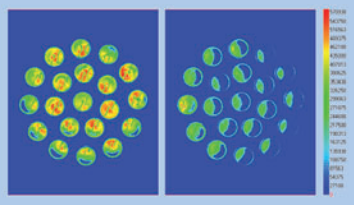

Extensive Viewing Cone Analysis Solutions

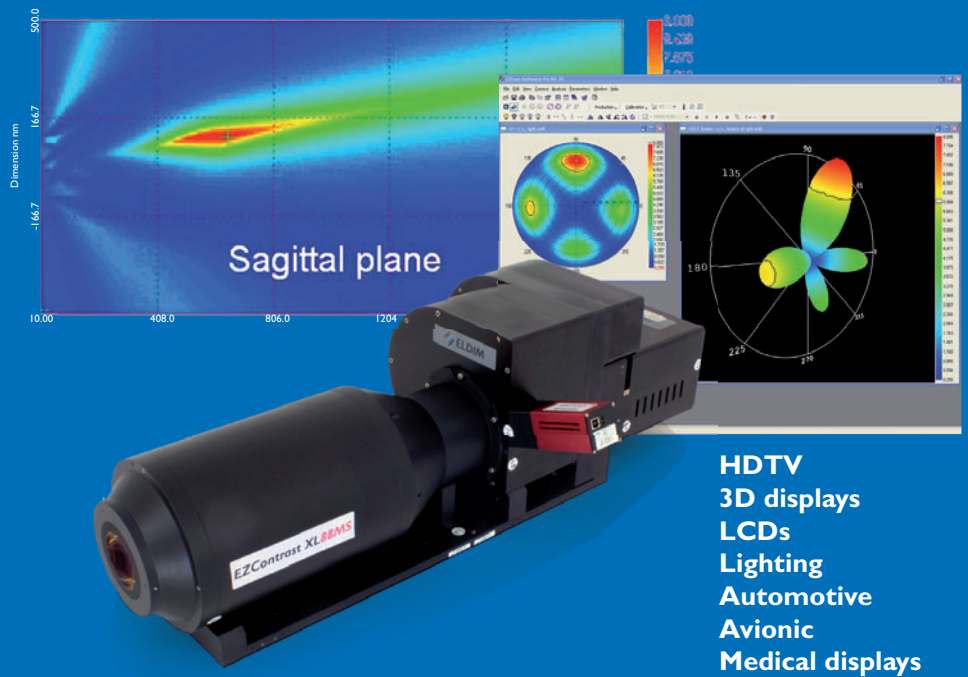

HDTV
3D displays
LCDs
Lighting
Automotive
Avionic
Medical displays

Imaging Solutions

LCDs
LCDs defect analysis
LEDs & LEDWalls
Dashboard & Cockpits
Lighting
Automotive
Avionic

Phone: +33 2 31 947 600 • e-mail: sales@eldim.eu • Web: www.eldim.eu

ELDIM

*COVER: **(Top Image)** In this elegantly lit Lassen residence located in Kapalua, Hawaii. noted interior designer Steven Cordrey applied Color Kinetics's intelligent LED lighting throughout the contemporary space, creating a colorful and ever-changing environment for the homeowner, artist Christian Lassen. The Rand hall boasts towering ceilings that are illuminated by iColor® Cove, designed to bring saturated color and dynamic lighting effects to alcove and accent spaces. The 6- and 12-in. units are individually controllable to allow for continuous streams of color and specialized lighting effects. iColor Cove is also used to illuminate a cove in the home theater's silver leaf ceiling, which reflects gradually shifting colors. **(Bottom Image)** In the Mediterranean city of Antalya on the Turkish coastline, the Amara Beach Resort Hotel treats entertainment-seekers to a pulsating disco with a twist – a mood-altering, color-changing dance floor lit by Color Kinetics's LED lighting. The dynamic dance floor is comprised of 32-in, (80-cm) square glass panels – 55 in all. Each panel is illuminated by four 12-in. (30-cm) lengths of iColor® Cove LT panels installed end-to-end on opposing sides of the square.*

CREDIT: Cover design by Acapella Studios, Inc.

Next Month in
Information Display

Flexible and Low-Power Devices

- Low-Power, Rugged Flexible AMOLEDs
- The Next Wave of e-Books
- Interactive Flexible Displays
- Ultra-Low-Power Technology Roundup
- *Journal of the SID* March Contents

INFORMATION DISPLAY (ISSN 0362-0972) is published 10 times a year for the Society for Information Display by Palisades Convention Management, 411 Lafayette Street, 2nd Floor, New York, NY 10003; William Klein, President and CEO. EDITORIAL AND BUSINESS OFFICES: Jay Morreale, Editor-in-Chief, Palisades Convention Management, 411 Lafayette Street, 2nd Floor, New York, NY 10003; telephone 212/460-9700. Send manuscripts to the attention of the Editor, ID. Director of Sales: Michele Klein, Palisades Convention Management, 411 Lafayette Street, 2nd Floor, New York, NY 10003; 212/460-9700. SID HEADQUARTERS, for correspondence on subscriptions and membership: Society for Information Display, 1475 S. Bascom Ave., Ste. 114, Campbell, CA 95008; telephone 408/879-3901, fax -3833. SUBSCRIPTIONS: Information Display is distributed without charge to those qualified and to SID members as a benefit of membership (annual dues $100.00). Subscriptions to others: U.S. & Canada: $75.00 one year, $7.50 single copy; elsewhere: $100.00 one year, $7.50 single copy. PRINTED by Sheridan Printing Company, Alpha, NJ 08865. Third-class postage paid at Easton, PA. PERMISSIONS: Abstracting is permitted with credit to the source. Libraries are permitted to photocopy beyond the limits of the U.S. copyright law for private use of patrons, providing a fee of $2.00 per article is paid to the Copyright Clearance Center, 21 Congress Street, Salem, MA 01970 (reference serial code 0362-0972/10/$1.00 + $0.00). Instructors are permitted to photocopy isolated articles for noncommercial classroom use without fee. This permission does not apply to any special reports or lists published in this magazine. For other copying, reprint or republication permission, write to Society for Information Display, 1475 S. Bascom Ave., Ste. 114, Campbell, CA 95008.

Information DISPLAY

JANUARY 2010
VOL. 26, NO. 1

For Industry News, New Products, Current and Forthcoming Articles, see www.informationdisplay.org

The New Year Brings in a New Era for OLED Technology

by Stephen P. Atwood

My editorial for this issue was all but complete when the news came in about the sale of Kodak's OLED business. The company's words in its press release: "Eastman Kodak Company (NYSE: EK) announced today that it will sell substantially all the assets associated with its OLED business to a group of LG companies." There it is, that simple. An amazing record of over 30 years of research and development efforts comes to a close from Kodak's point of view.

I ran a search on Google and found over 100 U.S. patents issued to Kodak with the term "OLED" in the title and over 200 more that refer to OLED somewhere in the text. This does not even address the international patent landscape, which is probably similarly broad. Many of these patents represent fundamental research that has seeded lots of follow-on efforts and licensing opportunities. Meanwhile, we've all watched the great progress, occasional stumbles, and stunning demonstrations that have come from Kodak over the years. I remarked on this in my June 2006 editorial in *ID* when I made a plea for "Flexible Expectations." I was referring to the news that the Kodak/Sanyo partnership had recently been dissolved and to the subsequent questions from analysts about whether this spelled the end for OLED development. Of course, I did not think so and argued that the problem was really that somewhat unrealistic expectations had been set by the people who market and report on the industry.

Developing OLED technology has required solutions to many hurdles in material science, physics, chemistry, *etc*. Several tangential technology innovation timelines have had to converge and it has taken more than just the science skills at Kodak. It has taken money – lots of money – some of it government funded but a whole lot more of it commercially invested by companies such as Kodak, Sony, LG, Samsung, Sanyo, Universal Display Corp, and others. Unfortunately for Kodak, there is only so much money it could afford to invest, and my guess is that getting to high-volume commercial success will still cost much more than anyone has spent to date.

In a recent *Display Daily* column from Insight Media, Ken Werner was quoted as saying, "As has been true for all display technologies, the path to high-volume manufacturing and larger sizes for AMOLED has been slower and harder than anticipated. That has left most of the serious development to large corporations with deep pockets and patient corporate cultures." Historically, I would not have thought of Kodak as a small company, but in this case, the future investment in OLED display manufacturing is likely to be counted in billions of dollars, not millions, and only a small number of players exist in the world that can make bets of this scale. There do not appear to be any more details about the terms of this sale in the public domain yet, but I sincerely hope Kodak's shareholders got a fair price because I would wager the business of OLED displays stands to be very profitable for someone when it eventually matures. This feels like the start of a new era and it's a bit sad that the dedicated team at Kodak will likely be watching from the sidelines now.

While many of you were still enjoying the last days of summer, our editorial staff was busy crafting our new format and filling out the hot topics for the 2010 calendar. What I find most interesting is how much overlap can be found between conventional display applications and many other technology areas.

(continued on page 31)

Information
DISPLAY

Executive Editor: Stephen P. Atwood
617/306-9729, satwood@azonix.com
Editor-in-Chief: Jay Morreale
212/460-9700, jmorreale@pcm411.com
Managing Editor: Jenny Donelan
603/924-9628, jdonelan@pcm411.com
Administrative Assistant: Ralph Nadell
Sales Manager: Danielle Rocco
Sales Director: Michele Klein

industry news

Kodak to Sell OLED Display Business to LG

by Jenny Donelan

In early December 2009, Eastman Kodak Company announced plans to sell the assets associated with its OLED business to a group of LG companies, setting off a flurry of interest and speculation in the display industry. Official details, such as financials of the transaction, were unavailable as *Information Display* went to press, and representatives from both Kodak and LG declined to comment for the time being. Kodak's announcement did, however, state that it would have continuing access to its OLED technology after the sale closed. In another press release distributed that same day, Kodak reported that it had signed a cross-license agreement that would end ongoing disputes between it and LG over various imaging patents and allow each other "broad access to each other's patent portfolio." Presumably, that means Kodak can continue producing its OLED-based products after the sale, but again, full details have not been released.

Kodak's sale announcement also quoted Laura Quatela, Kodak's Chief Intellectual Property Officer and manager of the company's OLED business, saying: "Our OLED intellectual property portfolio is fundamental; however, realizing the full value of this business would have required significant investment." When she referred to the company's OLED IP portfolio as "fundamental," she presumably meant its place in the industry as a whole, and if so, she was not overstating the case. Kodak has been a pioneer in developing OLED technology since the 1970s, and its related patents number in the hundreds. As analyst Paul Semenza wrote in his December 7, 2009 DisplaySearch blog (http://www.displaysearchblog.com/2009/12/kodak-exits-oled-business-after-30-years-lg-poised-to-compete-with-samsung/), "The vast majority of OLED displays produced to date use Kodak's technology and/or materials in some form." LG assuming control of those patents raises questions about how licensees will proceed in the future, particularly licensees who are competitors to LG.

When asked to speculate how that situation might evolve, Semenza said, "I can't imagine that LG bought this with the intention of being a licensor. It's not historically been their approach." One thing is certain, he added: a legal review will be necessary on all fronts. "There are a lot of different legal relationships in place."

About a week after the sale was announced, an article appeared in the *Korea IT Times* (http://www.koreaittimes.com/) stating that a new company with the working title of LG OLED would be formed with joint financing by LG Electronics, LG Display, and LG Chem. This move is being interpreted by industry experts as part of preparations for an OLED-market-share battle with Samsung Mobile Display. Because different OLED arms have existed within LG for some time, "It would make sense to have a focused organization," comments Semenza.

German Government Awards €3.26 million in OLED Manufacturing Funds to Merck KGaA, Applied Materials, and Braunschweig University

by Jenny Donelan

Two companies and a university are the recipients of a grant from the German Federal Ministry of Education and Research to develop processes to lower the cost of manufacturing organic light-emitting-diode (OLED) lighting. Merck, a leading OLED manufacturer with headquarters in Germany; Applied Materials, a major nanomanufacturing company based in Santa Clara, CA; and Braunschweig University, the oldest technical university in Germany, will receive the approximately €3.26 million in funding to implement a 3-year project called Light InLine, or LiLi for short.

LiLi (www.liliproject.com) is designed to find solutions to known obstacles of OLED technology, including limited lifetime, lack of standardization, and high costs, by developing large-area manufacturing processes for high-performance organic materials and efficient device design. The ultimate goal is to develop ceiling lights for homes and offices that are more energy efficient and produce more uniform light than do fluorescent light fixtures. The work will take place at Applied Materials' facility in Alzenau, Germany, and will cost an estimated total of about €7.49 million. LiLi's industry partners will contribute the remaining €4.23 million.

This grant, announced in mid-November 2009, follows on the heels of another from the German Federal Ministry of Education and Research earlier in the same month, which was to support the development of innovative, soluble materials for use in OLED components for devices such as televisions, traffic signs, and lighting systems. That project, called NEMO, for new materials for OLEDs from solutions, was announced by Merck KGaA and involves a consortium that includes, in addition to Merck, H. C. Starck Clevios, Ormecon, DELO Industrie Klebstoffe, the Fraunhofer Institute, the University of Tuebingen, Humboldt University, the University of Regensburg, and the University of Potsdam. The total cost of NEMO is an estimated €31.8 million; the ministry is providing €16 million of that amount.

These shows of hard cash on the part of both the German government and various industrial and educational institutions represent genuine interest in the future of OLEDs, according to Barry Young, managing director for the OLED Assocation. Although the project itself appears to be a continuation of work both Merck and Applied Materials have been doing, "What we're seeing here is a real focus on trying to make a breakthrough in OLEDs," he says, noting that the government is recognizing the importance of OLEDs and "trying to get it done faster." ■

guest editorial

The Emergence of Solid-State Lighting

by Jeffrey Spindler

The term "solid state" is defined by Webster as "relating to the structure and properties of solid material" and "using semiconductor devices rather than vacuum tubes." LEDs and OLEDs are solid-state semiconductor light-emitting diodes that are expected to be more durable than conventional incandescent and fluorescent light sources due to their solid structure of inorganic or organic layers. In addition to their less-fragile nature, LEDs and OLEDs have already met or exceeded the performance of fluorescent lighting in terms of efficacy, lifetime, and color while further offering environmental benefits such as elimination of mercury. These next-generation light sources have enormous potential for energy savings due to their high efficacy and long lifetime. Governments and industries around the world have recognized these fundamental benefits and are aggressively pursuing research and development in solid-state lighting (SSL).

LED technology has made tremendous progress and is already appearing in many commercial applications such as signage, automotive, backlighting for displays, and general illumination. OLEDs are several years behind, but the technology is quickly catching up in terms of performance. It is likely that both of these technologies will succeed due to their complementary nature, with the LED being a point source and the OLED a planar, diffuse light source. Like any new technology, there are many hurdles to overcome before widespread adoption of SSL, both technical and economic.

Kodak's 6 × 6-in. prototype OLED lighting panels with 50-lm/W efficacy, 3000K warm-white emission, and high-quality color rendering (CRI = 85) illuminate objects such as a MacBeth color chart and several fishing lures to demonstrate color-rendering quality.

(continued on page 30)

CREE RGB AND BRIGHT-WHITE, HIGH-BRIGHTNESS LEDs FOR VIDEO, DISPLAY AND SIGNAGE

LIGHTING THE LED REVOLUTION™

GAME CHANGING PERFORMANCE.

CREE HIGH-BRIGHTNESS LEDs.

Cree LEDs are revolutionizing lighting. Our full line of RGB and white high-brightness LEDs deliver high-performance at an economical price. Cree can help you bring energy-efficient LED light to video screens, display and informational signage, channel lighting, light strips and architectural lighting worldwide.

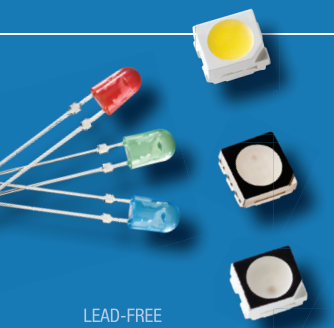

LEAD-FREE
ROHS-COMPLIANT

4-mm Oval LED

Screen Master Series for matched Radiation pattern

Luminous Intensity (mcd)
- C4SMF
  Red (1100 - 4180)
  Green (2130 - 8200)
  Blue (550 - 2130)

PLCC4 3 in 1 SMD LED

Luminous Intensity (mcd)
- Red (355 - 900)
- Green (560 - 1400)
- Blue (180 - 450)

Viewing Angle: 120 degree

PLCC6 3 in 1 SMD LED

Water-Resistant (IPX5*)

Moisture Sensitivity Level: 3

Luminous Intensity (mcd)
- Red (560 - 1120)
- Green (1120 - 2240)
- Blue (280 - 560)

PLCC4 1 in 1 SMD LED

Color Temperatures (K)
- Cool White: Min. (4600) / Typical (5500)
- Warm White: Min. (2500) / Typical (3200)

Typical CRI: Cool White 72, Warm White 80

Luminous Intensity (mcd)
- Cool White (1800 - 4500)
- Warm White (1400 - 3550)

Contact an authorized distributor at www.cree.com/hb or call 800-533-2583.

CREE®

* This part is tested under the condition of assembling it on a PCB with isolating the electrical path by silicone.

president's corner

Innovation Is a Big Tent

by Paul Drzaic
President, Society for Information Display

The Society for Information Display (SID) has a well-deserved reputation for facilitating innovation in the electronic-display industry. In this column, though, I want to discuss connecting to organizations outside of SID that also innovate in areas of science and technology that are relevant to displays. These groups tend to cover topics that are somewhat different from those prevalent at SID events, but that nonetheless represent intriguing opportunities for connection to SID.

As one example, the Materials Research Society (MRS) holds two yearly meetings that draw over 10,000 participants between them, and cover nearly 100 different symposia topics. Meeting emphasis is clearly on research, and much of the work is fundamental and exploratory. But since one definition of "materials" is "matter that is useful," most of the research has an eye toward possible applications down the road. Optical and electrical materials are a major area of focus, so references to electronic displays are abundant.

I attended the most recent meeting of the MRS last fall, and there was plenty of early-stage work that could become the basis of commercial electronic-display technology in a 5–10-year time frame. What were some of these topics? How about super-compliant and even stretchable electronics, self-assembled nanoscale dielectrics for transistors, zinc-oxide-based transistors, and N-channel organic semiconductors, for organic CMOS circuitry? Since these all represent research, most may never amount to practical application, but it's almost a sure bet that some will.

It was nice to see several familiar faces from SID conferences at the MRS meeting. Even better were the talks during which the speakers cited work that had been first unveiled at a SID Symposium. This is great exposure for our society, and we would all benefit from spreading the word about SID to people who may not be familiar with what we do.

As another example of cross-society fertilization, I'll relate my experience in speaking at a Bay Area IEEE chapter meeting last year. This IEEE Packaging Group was interested in hearing what was new in flexible displays, and the Bay Area SID chapter cooperated by publicizing the event. The IEEE chapter leadership was quite pleased when over 100 people showed up for the talk – about double the number of attendees normally on-hand. These extra 50+ people were mostly SID chapter members, so the IEEE got a chance to advertise their activities to a new audience. In return, over 50 IEEE members got to hear about topics relevant to them in the field of displays and discover that the local SID chapter events are a good place for them to turn to learn more. It was win-win all around.

The lesson here is that the field of electronic displays is a big tent. There are large numbers of people who could be enticed to participate in more SID events if they were made aware of these connections. Moreover, our field of displays could benefit from bringing in topics and points of view from outside our normal circles of contact. I would ask all our members to consider reaching out to groups beyond SID and to spread the word about what we do. ■

Society for Information Display
1475 S. Bascom Ave., Ste. 114
Campbell, CA 95008
408/879-3901, fax -3833
e-mail: office@sid.org
http://www.sid.org

Next-Generation Solid-State-Lighting Technology

Inorganic light-emitting diodes (LEDs) and organic light-emitting diodes (OLEDs) have the potential to revolutionize the lighting industry due to high efficiency, long lifetime, and unique form factors that will enable creative lighting designs not possible with conventional light sources. This article will provide an overview of inorganic and organic light-emitting-diode technology as it applies to solid-state lighting, with an emphasis on OLEDs.

by Jeffrey Spindler, Tukaram K. Hatwar, and Steven Van Slyke

THROUGHOUT HISTORY, man has sought methods to produce light. All of these methods have involved conversion of one form of energy from various sources (wood, oil, gas, hydro, nuclear, *etc.*) into another (electromagnetic radiation), but the overall energy-conversion efficiency has played a relatively minor role in comparison to cost. Only in the last 20 years or so – with the recognition that our planet is affected by the activities of mankind – have significant activities to improve energy efficiency begun. This has helped spur the development of inorganic and organic light-emitting-diode technologies directed toward providing highly efficient, cost-competitive alternatives to conventional light sources.

Modern lighting began with the invention of the incandescent light bulb by Thomas Edison in 1879. This low-cost technology is still in use today; however, it is being phased out largely due to government mandates as a result of the relatively low energy-conversion efficiency. Fluorescent lighting was introduced to the market in 1938 and has become a dominant lighting technology due to the high efficacy and long lifetime relative to incandescent lighting; however, the less-than-satisfying color manifested as a poorer color-rendering index (CRI) has historically limited its penetration into the home environment, although compact fluorescent lights are becoming more common (taking nearly two decades to get to this point) largely because they are socket compatible with incandescent bulbs. In fact, it is expected that compact fluorescent lamps (CFLs) will grow less common as SSL technologies such as inorganic light-emitting diodes (LEDs) and organic light-emitting diodes (OLEDs) become available. Although the modern LED was discovered in 1962 and the OLED in the late 1970s, only in recent years have LED solid-state-lighting (SSL) sources started to appear in white-light applications (owing to recent advances in both efficacy and white-color availability). We appear to be at the very early stages of a lighting revolution in which LEDs and OLEDs will become dominant light sources in the decades to come. This said, there are many obstacles that remain in the way of mainstream adoption that warrant further discussion.

Jeffrey Spindler, Tukaram K. Hatwar, *and* ***Steven Van Slyke*** *are with the OLED R&D Group, Eastman Kodak Company.*

Comparison of Lighting Technologies

Let's take a moment to review the performance of existing light sources and compare these with solid-state LED and OLED light sources. Table 1 shows a performance comparison of the various common lighting technologies in terms of efficacy, lifetime, and color-rendering index (CRI). The CRI is a measure of the ability of a light source to reproduce the colors of various objects in comparison to a reference light source. Depending on the color temperature of the light source, the reference can be an ideal

Table 1: Comparison of lighting technologies. (HID refers to high-intensity discharge.)

Parameter	Incandescent	HID	CFL	FL	LED	OLED
Efficacy (lm/W)	15	40–150	45–65	60–100	60–120	40–80
Lifetime (L70 h)	1200	20000	5000	20000	50000	20000
CRI	100	25–75	70–80	70–80	70–90	75–95

0362-0972/01/2010-008$1.00 + .00 © SID 2010

"blackbody" radiator (if color temperature is below 5000K) or a natural light source such as daylight (if the color temperature is above 5000K).

Incandescent lighting has been in existence for over a century. The bulbs are inexpensive, the light level is high, and the CRI is 100. Low efficacy and limited lifetime are problematic, however. With respect to the efficacy, only about 5% of the energy consumed by the incandescent bulb is converted into visible light, and this is the primary reason that many governments are mandating that incandescent bulbs be phased out over time. High-intensity-discharge (HID) light sources such as low- and high-pressure sodium lamps are commonly used for street lighting and other outdoor applications due to their very high brightness and much longer lifetime than incandescent bulbs, and the fact that they have a wider operating temperature range than fluorescent lights. However, this technology suffers from low CRI due to the almost monochromatic yellowish emission and is not acceptable for home or office-lighting applications. Other HID light sources such as mercury vapor and metal halide can have improved CRI with good efficacy and are used in high-end applications such as rear-projection TVs (LCOS and DLP) as well as front projectors for conferences and advertising, but not for general lighting. Ultra-high-pressure mercury-vapor lamps are commonly used as broadband photoresist exposure light sources. These technologies operate under high temperature and high pressure and require special fixtures and UV-radiation-blocking filters; therefore, they are not typically used for home or office lighting.

Fluorescent lighting (FL) offers high efficacy, long lifetime, and good light output with reasonable CRI, as well as low cost. These attributes are the primary reasons why FL is used in office buildings, typically in the form of linear tubes. CFLs, mostly socket-compatible with incandescent bulbs, are now commonly sold for home use. The adoption of CFLs has been slow, however, because of performance issues (early failure, slow start-up, and poor CRI) and high lamp cost. Whether or not CFLs will ever be widely adopted is often a subject of debate, but consumer displeasure with this technology is clearly evident by the hoarding behavior observed when new government mandates are announced that prohibit the sale of incandescent bulbs after a certain date. Of further consideration is the fact that FL and CFL bulbs contain mercury, a substance that has been linked to various health problems when improperly disposed of.

As is clearly shown in Table 1, the SSL technologies (LED and OLED) provide high efficacy and CRI as well as good lifetime. Additionally, SSL can be incorporated into fixtures that are small and flat (especially in the case of OLEDs), a feature that is highly attractive to lighting designers. It is important to note that the numbers in Table 1 do not reflect any efficiency losses due to the fixture or luminaire, and these losses can be significant, depending on how well or how poorly the luminaire is designed. For example, a recent study conducted by the U.S. Department of Energy (DOE) in one of its product testing programs called "CALiPER" shows a wide range of actual measured efficacy for a particular technology and for a variety of lighting products on the market (see Fig. 1).

As is shown, the efficacy of incandescents and halogens (a type of incandescent lamp) ranged from about 5 to 17 lm/W, while CFLs ranged from 25 to 50 lm/W. SSL lamps showed the widest range, from about 10 to 60 lm/W with an average of 36 lm/W. For the SSL lamps, it is likely that some of the luminaires are not well designed because the LED package within the luminaire probably has an efficacy in the range of from 40 to 100 lm/W; however, it also demonstrates the potential for SSL since some of the luminaires already achieve an efficacy of over 60 lm/W.

Government Initiatives

Due to the enormous potential for SSL and the strategic importance of energy conservation, governments around the world are providing funding for SSL research, development, and commercialization. The United States signed the Energy Policy Act (EPACT) in 2005, with the objective "to develop advanced solid-state organic and inorganic lighting technologies based on white-light-emitting diodes that, compared to incandescent and fluorescent lighting technologies, are longer lasting, more energy efficient, and cost competitive, and have less environmental impact… ." Through the DOE's Office of Energy Efficiency and Renewable Energy (EERE), the U.S. Government is committed to supporting the research, development, demonstration, and commercial application activities related to advanced SSL technology. The DOE has funded advanced

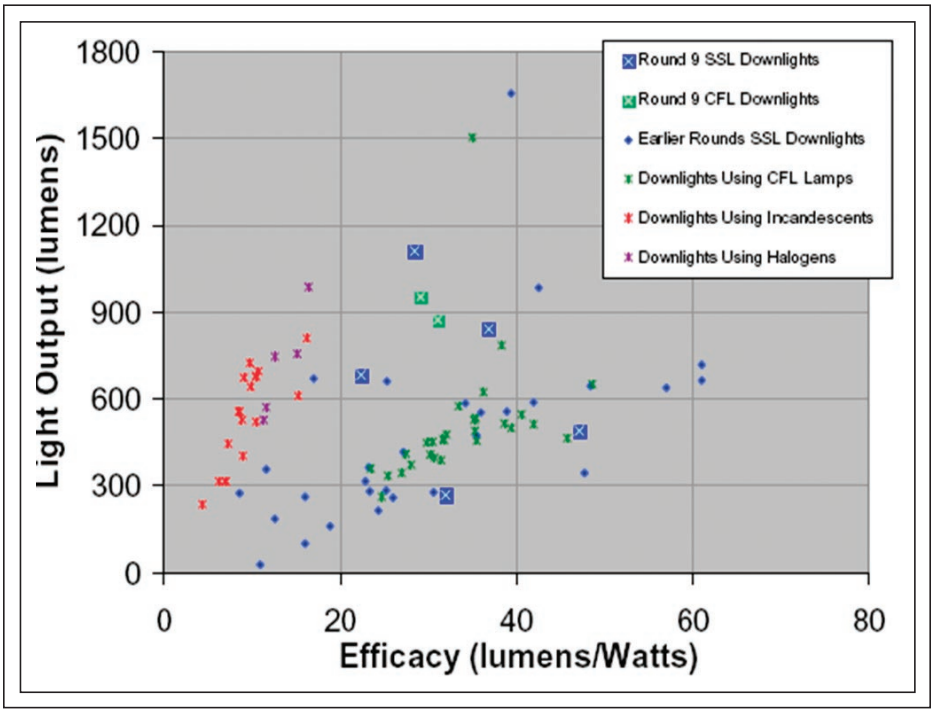

Fig. 1: *The performance of SSL downlights is compared to downlights equipped with CFL, incandescent, and halogen lamps.*

SSL research since 2000. The current R&D portfolio includes 44 projects, 59% of which are LED related and 41% OLED related, with cumulative funding (including in-kind) of approximately $75 million. The 2009 Multi-Year Program Plan (MYPP) sets performance targets through FY2015, as seen in Table 2, with aggressive efficacy targets for both LEDs and OLEDs.

In addition to the CALiPER program and R&D funding in core research and product development, the DOE sponsors other programs such as GATEWAY demonstrations (which study the performance of LED lighting in challenging environments such as the new I-35 bridge in Minnesota); standards development through standard-setting organizations such as IES, NEMA, UL, and ANSI; the SSL Quality Advocates program, which requires participating manufacturers to perform prescribed tests and label their products accordingly (the "Lighting Facts" label); and the Energy Star program, which sets stringent criteria that a product must meet in order to obtain the desirable Energy Star label. These labels (shown in Fig. 2) are likely to be seen on high-performance SSL products.

Europe has also invested heavily in SSL, particularly OLED technology. The "OLED100" program is an R&D effort aimed at developing technology to produce efficient OLED products and is a collaboration among major European corporations that have an interest in SSL. In this program, the objectives are to produce highly efficient OLEDs with 100-lm/W efficacy and 100,000-hour lifetime on a large-area tiled OLED luminaire with an area of 100 cm × 100 cm, at a cost of less than 100 Euros per square meter. Asian countries – primarily Japan, China, Taiwan, and South Korea – also aggressively invest in SSL research and development as well as fund manufacturing infrastructure expansion.

Table 2: DOE SSL performance targets for 2009–2015 include a variety of OLED/LED/ luminaire combinations.

Metric	Device Type	2009	2010	2012	2015
Efficacy - Lab (lm/W)	LED (cool white)	144	160	176	200
	OLED	70	99	150	150
Efficacy - Commerical (lm/W)	LED (cool white)	132	147	164	188
	LED (warm white)	83	97	114	138
	OLED	N/A	44	76	150
Luminaire Efficiency	LED	58%	64%	70%	80%
	OLED	81%	81%	85%	90%
Luminaire Efficacy (lm/W)	LED (cool white)	77	94	115	151
	LED (warm white)	48	62	80	110
	OLED	N/A	36	65	122

Solid-State Lighting

The drive for energy efficiency has accelerated the effort to produce efficient lighting. In the U.S., lighting accounts for 22% of all electricity used, and it is estimated that the implementation of SSL could reduce the electricity used for lighting by one-third by 2030. It is important to recognize that LEDs and OLEDs differ significantly in form factor, with LEDs being highly intense point sources and OLEDs being large-area diffuse light sources. This complementary nature suggests that both technologies can be successful – perhaps for different applications. Clearly, LED technology is more mature than OLED and penetrates many different lighting markets, with a worldwide revenue of approximately $10 billion in 2009. OLED SSLs are becoming available in small quantities (Philips and Osram), and there is a considerable presence of commercial OLED displays, demonstrating the manufacturing viability of OLED technology.

LED Fundamentals

The inorganic LED is essentially a small-area (~1 mm^2) device built on a wafer and uses conventional semiconductor fabrication processes. Since the substrate is usually a specialty material such as GaAs, sapphire, or SiC instead of conventional silicon, the wafer sizes tend to be small, in the 2–4-in. range. These factors contribute to the high cost of the LED chip per unit area. The critical emission layers consist of compound III-V semiconductors that have direct bandgaps and therefore more efficiently produce photons than do semiconductors with indirect bandgaps, such as silicon. Wide-bandgap materials such as AlInGaP and InGaN are commonly used to produce visible light in the

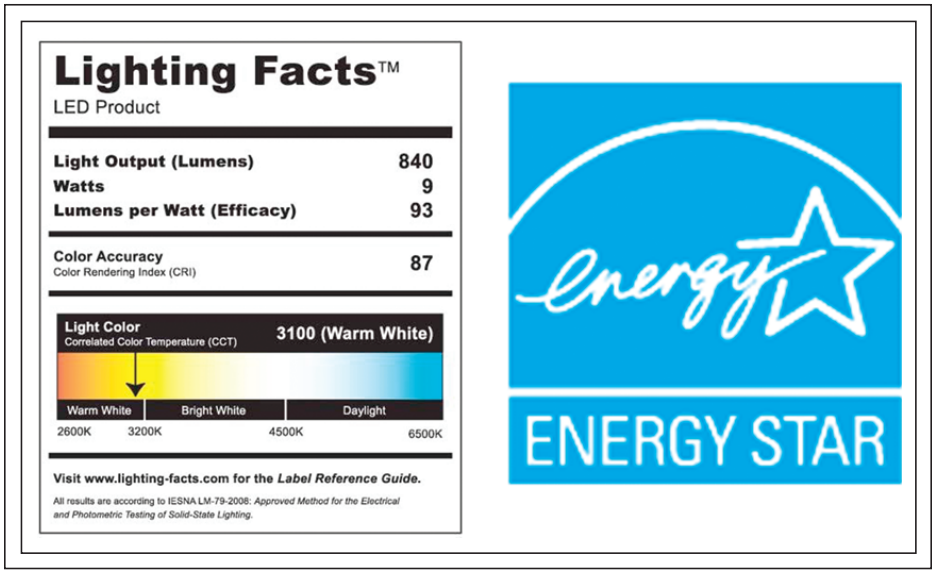

Fig. 2: The familiar Energy Star label (right) is likely to show up on more SSL products, along with rating details, such as shown at left.

yellow-to-red region and blue-to-green region, respectively. These layers are typically grown as thin films at very high purity, using epitaxial processes such as molecular beam epitaxy (MBE) or metal-organic chemical vapor deposition (MOCVD). In the late 1980s, a key breakthrough was made using GaN-based materials with improved growth methods and p-type doping, which enabled high-brightness blue LEDs that form the basis of all-white-light LEDs produced today. Mechanistically, for all LEDs, electrons and holes are injected through metallic contacts to the n- and p-type layers, where they are spread uniformly before they recombine in the active layers, or quantum wells, to form a photon. The blue LEDs consist of multi-quantum wells (MQWs) or several layers of InGaN with varying InN-GaN fraction, sandwiched between layers of doped GaN. Only a fraction of the photons generated in the active layers would normally exit the device due to total internal reflection, so various light extraction techniques have been developed to more efficiently extract the otherwise lost photons from inside the LED device.

White LEDs

There are a few different approaches to creating white light from LEDs. The most common approach is phosphor conversion, which uses a blue- or UV-emitting LED coated with a yellow phosphor (typically cerium-doped YAG) that absorbs the shorter-wavelength emission and emits longer-wavelength emission. The blue light from the unabsorbed LED emission, combined with the yellow emission from the phosphor, results in white light. The CRI can be improved by introducing multiple phosphors to broaden the emission spectrum. Another approach to producing white is by discrete color mixing of light from LEDs that have different wavelengths (such as R,Y,G,B). Hybrid approaches are also used to combine the advantages of both methods, consisting of phosphor (W) LEDs and monochromatic LEDs such as R and G.

LEDs for SSL

The LED is capable of being driven very hard, due to the robustness and high thermal conductivity of the solid-state inorganic layers; therefore, it can produce extremely high surface luminance. However, the lifetime and efficiency decrease as the junction temperature increases, so the device must be operated within a safe region that limits the junction temperature and still produces the desired luminance. Thermal management is very important for high-brightness LEDs that need to maintain low junction temperature. Due to the high luminance, the LED cannot be viewed directly and must include additional optical components to extract, diffuse, and direct the light from the device. The LED die is typically assembled into an LED package, which includes a mounting substrate, encapsulant, electrical connections, and optical and thermal-management components. The LED package is connected to a power source or driver, which converts line voltage to the appropriate power and current and is finally integrated into a luminaire. There are many opportunities in which efficiency can be lost in the overall process of converting energy into photons and extracting those photons into visible light and, through tremendous effort directed at reducing these losses, LED SSL can reach >50% energy-conversion efficiency, 10 times better than the incandescent bulb and 2–3 times better than CFL.

LED Challenges

The largest barrier to overcome with regard to LED SSL is still the high initial cost, although in many applications the total cost of ownership becomes more attractive as the fixture price falls and the performance improves. Some of the options being explored to reduce the cost are (1) improved throughput of the epitaxy growth process through better equipment design and process controls, (2) lower-cost substrates such as Si or low-cost bulk GaN and larger diameter substrates, (3) back-end processing improvements such as more automated and higher-throughput equipment, and standardization of packaging or wafer-level packaging. Another barrier to manufacturing is the need for binning due to performance variability (voltage and color) that stems from lack of uniformity and reproducibility in the epitaxial growth process, as well as inconsistent binning between manufacturers. Other challenges include lack of standardized life testing and the need for power supplies and drivers as well as modeling tools that optimize the system performance in a luminaire. Despite these challenges, LEDs are expected to become a dominant next-generation light source. It is interesting to note that high-end applications for white LEDs, such as backlights for LCDs, have provided much momentum to LED process development and integration in the last few years.

OLED Fundamentals

The OLED can be thought of as a large-area planar sheet of light, a form unlike any other source of light. This means that an OLED can be considered as a luminaire and will likely avoid many of the fixture inefficiencies experienced by other light sources. In fact, many other lighting technologies strive to achieve the flat, diffuse, and pleasant appearance that is inherent to OLEDs. OLEDs can easily produce the modest luminance levels required for general illumination. For example, a 1-m^2 OLED operating at 1000 cd/m^2 can produce the same luminous output as a 4-ft.-long T8 fluorescent tube (~3000 lm), and it must be recognized that the luminous output from a fluorescent tube is reduced significantly when incorporated in a luminaire. From a lifetime standpoint, it is desirable to operate the OLED at a low current density (which still produces enough luminance); however, fixture-size limitations may become an issue, as well as cost. From a maximum luminance standpoint, glare must be avoided – and this will likely set the upper limit, which is thought to be in the 3000–4000-cd/m^2 range. Clearly, as the OLED SSL technology matures, these issues will need to be understood.

Organic compounds used for OLEDs are carbon-based solid materials that exist as either small molecules or polymers. There is a seemingly endless supply of organic compounds that are being investigated for OLED devices, and these are typically deposited by vacuum thermal evaporation or in some cases by solution processing, as extremely thin layers on the order of 1–100 nm in thickness. OLEDs can be built on a variety of substrates, including glass, plastic, or metal foils and therefore can easily be made bendable or flexible, or even transparent. A typical bottom-emission OLED consists of a transparent conductive anode made of ITO, followed by a stack of thin organic layers that perform the functions of hole injection and transport, emission, and electron transport and injection. Electrons and holes are injected from the electrodes and transported to the emission layer, where they recombine to produce a photon.

The emission layer usually consists of a host material and a dopant material that interact with each other to efficiently emit light of a desired wavelength, which depends primarily upon the luminescent properties of the dopant. The cathode is usually a highly reflective metal such as Al or Ag and is formed directly over the organic stack. Because the layers in an OLED device are extremely sensitive to moisture, a high-performance encapsulation system is required. Regardless of the method, encapsulation is essential to prevent moisture ingress to the active layers.

OLED Manufacturing

Because the OLED format to be used for SSL has not yet been decided, the high-volume manufacturing technology that will be implemented first is unclear. Whether the OLED film structure will be created by solution coating or vacuum coating (or a combination of both methods) is being evaluated, as are issues related to whether web coating or rigid substrates would provide the required performance and cost for high-volume manufacturing.

From a performance standpoint, a bottom-emitting format that uses vapor-deposited small molecules has been shown to provide high efficacy and lifetime. Typically, the organic material is deposited onto ITO that is pre-patterned on a glass substrate and is followed by the deposition of a cathode metal. In the simplest form, a second glass plate is used for encapsulation and a desiccant is placed between the two plates to absorb moisture that penetrates a perimeter-applied sealant material. This is the architecture that has been implemented for OLED-display applications for the primary reason that flexible substrate processing for OLEDs has not yet been demonstrated to produce as robust devices in comparison to devices made that use rigid substrates. This is due to several factors, mostly related to the moisture barrier properties of the flexible substrate material. Glass is impervious to moisture and is consequently well suited as the substrate and encapsulation material. For lowest cost, of course, alternative encapsulation schemes are being investigated, such as using metal foil or thin-film encapsulation instead of glass. It is expected that the first-generation mass-produced OLED SSL products will use glass substrates with glass or foil encapsulation.

As with OLED display R&D, alternative substrate materials, such as polyethylene naphthalate (PEN) and polyethylene terephthalate (PET), are being studied. The key performance requirement of low-moisture permeability has been addressed by applying inorganic films (usually in multilayer organic/inorganic stacks) over the polymer support material. This technique is effective, although cost and yield issues are thought to be problematic.

Unit manufacturing cost (UMC) is very important for OLED SSL products. As is the case in the display industry, one route to lower UMC is to process larger substrates – consequently with a larger number of SSL "tiles" per substrate. Although OLED display manufacturing equipment is not available beyond Gen 4 (720 mm × 930 mm), this is limited primarily by the precision masking process commonly used to pattern the R, G, and B emitters. With a white-emitting format, which does not require precision masking, and advanced source methodology such as Kodak's Vapor Injection Source Technology (VIST), it is expected that equipment size can be rapidly increased.

Another significant difference between OLED-display manufacturing and OLED SSL manufacturing is that the latter does not require an active-matrix (LTPS or a-Si) backplane and hence display-grade glass substrates are not required. This is a very significant cost factor and it is envisioned that OLED SSL devices will be able to utilize low-cost "float" glass.

Cost is also the main driver for R&D activities in roll-to-roll coating. Whether this will eventually provide a lower-cost solution for OLED SSL is dependent more on the OLED performance of devices made using this technique than on whether equipment can be constructed. As mentioned previously, issues of substrate and/or encapsulation moisture impermeability will likely be problematic with this approach.

White OLEDs

Just like an LED, the emission from an OLED can be optimized for desirable white color and CRI. An OLED can contain multiple emission layers of complementary colors that together form white, such as B/Y, or B/G/R, or B/Y/R. In some cases, the emitters can be combined into a single emission layer, but precise control of dopant concentrations is required to obtain the proper emission spectrum. White OLEDs with three or four emitters have broader emission spectra and therefore can have high-color-rendering properties. It is not difficult to obtain a CRI of 90 or greater for a properly designed white OLED. The OLED emitters are either fluorescent or phosphorescent materials. Phosphorescent (or triplet) materials have a theoretical maximum internal quantum efficiency (IQE) of 100% due to the spin statistics of triplet emission, while fluorescent (or singlet) materials have a theoretical maximum IQE of 62.5%.[1] At the present time, high stability levels have been demonstrated for fluorescent and phosphorescent emitting systems except for phosphorescent blue emission.

Tandem or Stacked OLEDs

OLEDs can be stacked vertically using a p-n connector or charge-generation layer, which allows two or more stacks to emit simultaneously. The connector must be transparent and have suitable properties to allow proper balance of charge in each stack; a poorly designed connector will result in high voltage, poor efficiency, and short lifetime. The tandem configuration allows for more flexibility to design the proper emission spectrum to achieve high efficiency and high CRI. Also, one can choose to use a combination of fluorescent and phosphorescent emitters. Because of the phosphorescent blue stability problem, a hybrid approach using a combination of phosphorescent emitters with a fluorescent blue emitter has been developed. This takes advantage of the higher efficiency phosphorescent materials in the green-to-red region and the higher stability of the fluorescent blue. Typically, a fluorescent blue emitter is placed in one stack, with the other stack consisting of two or more phosphorescent emitters (such as G/R, Y/R, or G/Y/R), which combined produce white emission. An example of a hybrid tandem structure is shown in Fig. 3.

Although the blue efficiency is lower for fluorescent emitters, warm white emission can still be produced with this approach because little blue intensity is required relative to the intensity of the yellow-to-red emission. Tandem OLEDs also have a lifetime advantage over single-stack OLEDs because the device can be operated at a lower current

Fig. 3: A hybrid-tandem white OLED structure incorporates a triplet red + yellow emission layer, and a singlet blue-emission layer.

density to produce the same luminous output. Alternatively, the device can be operated at a higher current density and reduced in size to produce the same luminous output, which in turn would reduce the area-related cost.

OLED Performance

White OLEDs have been demonstrated with up to 80-lm/W efficacy, with color meeting Energy Star specifications, and up to 124 lm/W with color outside the specifications. Figure 4 shows the efficacies of a variety of phosphorescent and hybrid OLED SSL devices reported in the literature, plotted on a 1931 CIE chromaticity diagram showing the Energy Star tolerance quadrangles. Devices denoted by an asterisk use an external macro-extractor, which is typically a thick, shaped glass lens used to extract light that would otherwise emit from the edges of the device substrate. It is unclear whether or not these bulky macro-extractors can be practically integrated into OLED SSL luminaires. Other devices use a flat extraction film or structure applied to the external emitting surface of the substrate, or applied internally in contact with the OLED to extract light that would otherwise be trapped inside the organic layers of the device.

It is noteworthy that many of the higher efficacy numbers are well off the blackbody locus in the greenish direction (higher CIEy). If the white spectrum contains more greenish emission near the eye's peak sensitivity (555 nm), which in turn produces higher luminance, this higher luminance naturally translates to higher efficacy. To achieve white emission close to the blackbody, the green intensity needs to be reduced, which in turn will lower the efficacy by a considerable amount. In order to meet the 150-lm/W efficacy goal, significant progress must still be made to improve materials and device performance in terms of higher efficiency and lower voltage. A breakthrough in light-extraction efficiency may also be required to more effectively extract the photons from

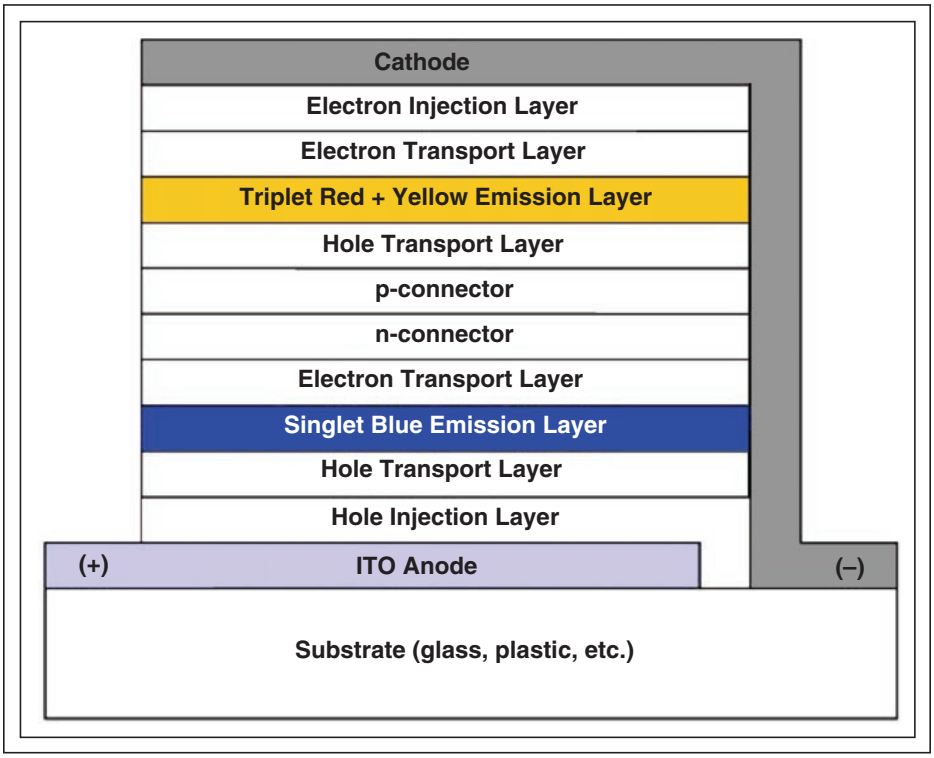

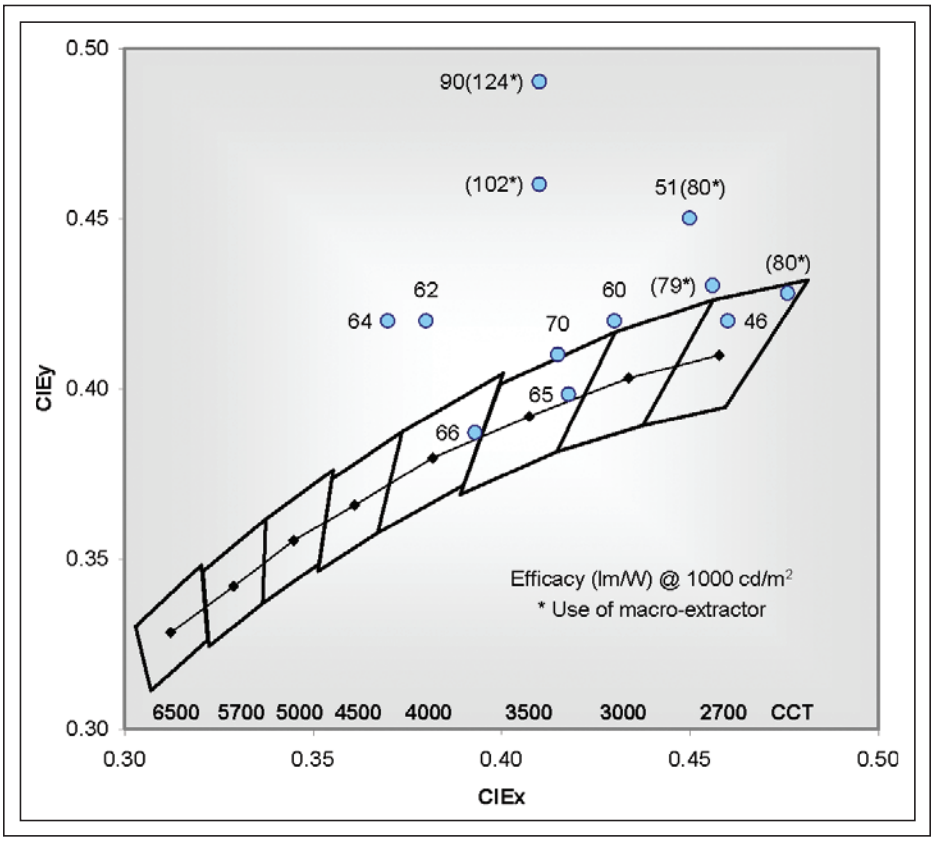

Fig. 4: Various SSL OLED device efficacies are benchmarked using a CIEx,y chromaticity diagram.

inside the device by improving light-outcoupling techniques and reducing unwanted absorption. In addition, lifetime will need to be continually improved to meet more demanding applications that require higher luminance and longer lifetime.

Figure 5 shows a photograph of OLED lighting tiles developed in Kodak's research laboratories. The tiles have nearly 50-lm/W efficacy with Energy Star compliant color at 3000K and a CRI of 85. These panels were fabricated using a hybrid tandem white OLED and a monolithically integrated tiling approach, in which the OLEDs are segmented to reduce IR loss and provide more defect tolerance (see Fig. 6). This approach can take advantage of low-cost patterning techniques.

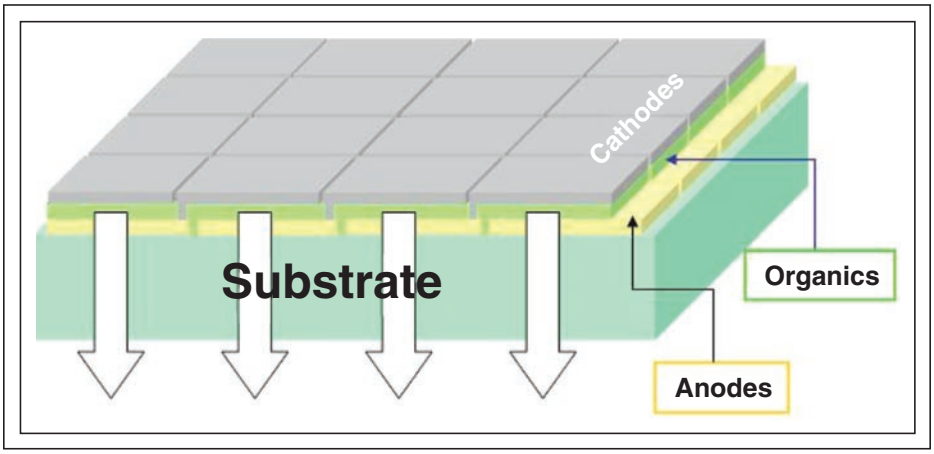

Fig. 6: A monolithic series-connected OLED design such as this was used to create the panels in Fig. 5.

OLED Challenges

Similar to LEDs, the largest roadblock facing high-volume commercialization of OLED SSL will be the high initial manufacturing cost. The same cost of ownership principles used to justify the high initial cost of LEDs will also apply to OLEDs. This will allow OLEDs to penetrate existing high-end markets and new markets that take advantage of the features that only OLEDs can offer. But until the luminaire cost can come close to the dominant fluorescent lighting technology, widespread adoption into general illumination will come about slowly.

There are many opportunities for cost reduction in OLED SSL manufacturing. First, the manufacturing approach will have a large impact on the cost. If roll-to-roll manufacturing is successful, this could have an immediate impact; however, at this time, all high-efficacy OLED devices have been fabricated using vacuum evaporation. Large vacuum equipment has high capital cost, but with high throughput, the manufacturing cost can be reasonable, even with complicated OLED device structures such as tandems. OLED material utilization also needs to improve, perhaps through solutions such as Kodak's VIST flash evaporation sources that can realize 50–90% material utilization and are scalable beyond Gen 5 glass. OLED materials can also be deposited in solution by nozzle printing or ink-jet printing, and these techniques are under development by several different companies. OLED equipment manufacturers have begun to develop large-sized OLED deposition equipment for OLED displays, and this equipment will be available for OLED SSL manufacturing as well.

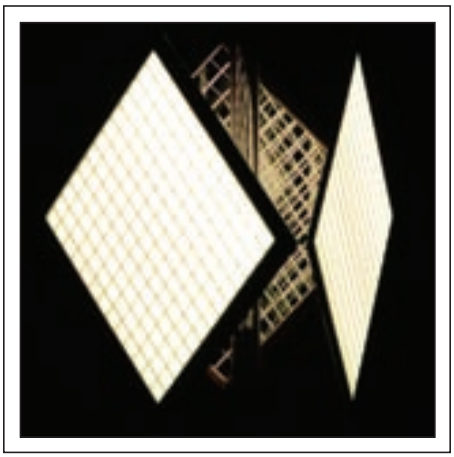

Fig. 5: OLED lighting tiles developed at Kodak have nearly 50-lm/W efficacy.

Yield losses due to particles (shorting, pinholes in encapsulation, *etc.*) will be a significant issue to overcome. Because the organic layers are typically very thin, on the order of hundreds of nanometers, OLEDs can be susceptible to particles or rough surfaces, which cause shorting or leakage between the electrodes. Defect-tolerant structures, layers, and techniques are being developed to deal with this issue. One such method is the use of a high-resistance layer applied between the electrodes that can reduce or eliminate the effect of a shorting defect. Since the area of a typical shorting defect is much smaller than the area of the OLED device, this high-resistance layer adds an electrical resistance to the defect that is much higher than that added to the device; therefore, the applied current will flow through the device instead of the defect.[2] Other techniques involve using thick solution-processed hole-injection layers or thick doped transport layers to planarize over smaller particle defects.

Outlook

LEDs are well on their way to becoming a dominant lighting technology, with high-volume products now on the market. OLEDs, different from LEDs primarily because of the diffuse planar nature of the emission, have begun to appear on the market in limited quantities. With attributes of high efficiency, high CRI, and good lifetime, it is expected that OLED SSL will become a competitive technology for next-generation lighting.

References

[1]D. Y. Kondakov, T. D. Pawlik, T. K. Hatwar, and J. P. Spindler, "Triplet annihilation exceeding spin statistical limit in highly efficient organic light-emitting diodes," submitted for publication in *J. Appl. Phys.* JR09-4139 (2009).

[2]Y. S. Tyan, G. Farruggia, and T. R. Cushman, "Reduction of Shorting Defects in OLED Devices," *SID Symposium Digest* **38**, 845-848 (2007). ■

LEDs Come to the Forefront of General Lighting Applications

High-brightness LEDs used in solid-state lighting are changing the way light is used to define areas, shape living spaces, save energy, influence moods, improve security, and transfer information. Lighting designers using LEDs will have the ability to transform the way we see the world.

by Christopher Eichelberger

As the general-lighting landscape continues to develop, light-emitting diodes (LEDs) are being adopted as a viable alternative to conventional lighting due to their ability to direct light and save energy. They are increasingly being used in solid-state lighting for both indoor and outdoor applications, including restaurants, hotels, stores, malls, museums, offices, and residences, as well as walkways, bridges, and parking garages. From accent lighting to practical full-scale outdoor illumination, LEDs are fast becoming the light source of choice for many designers.

The benefits of LEDs, in addition to energy savings, include long life and low maintenance, dynamic lighting effects, high reliability, and near-limitless design options including color accents and color mixing. Additionally, LEDs are "green" products in that they do not contain substances that are currently known to harm the environment.

Luminous Efficacy

Compared with conventional light sources such as incandescent and halogen lamps, LEDs offer a new level of efficiency.

***Chris Eichelberger** is an Application Engineer, Solid-State-Lighting/LED Products, for OSRAM Opto Semiconductors. He can be reached at Christopher.Eichelberger@osram-os.com.*

Whereas incandescent lamps achieve ~10 lm/W, and halogen lamps around 20 lm/W, the efficacy of white LEDs is typically between 50 and 100 lm/W (depending on the type). Power consumption is low, ranging from 0.1 to 15 W, with 1 W being the most common, so even small LEDs can be used to produce high levels of light. And today's typical efficacies will quickly become history, as efficacies exceeding 100 lm/W have already been achieved in the cold white spectrum, while laboratory prototypes have been developed with efficacies of more than 185 lm/W.

An incandescent lamp converts only 3% of the input power into light, but LEDs currently convert about 20%, and that number will continue to increase as the technology advances. This enables LED light sources to provide high energy efficiency, with LED components today delivering ~ 80–100 lm/W with a projected efficacy of 188 lm/W by 2015 (Table 1). These improvements in efficiency (in terms of both lm/W and lm/$) make LEDs an attractive alternative to conventional light sources.

Challenges Facing LEDs

There are, of course, some challenges ahead. Any company looking to service the market for general lighting must have close control over performance and costs. This involves the relationship between light output (lumens)

Table 1: LED Metrics Roadmap: the 2009 LED device prices are based on the best reported values for commercially available devices and, as shown, will decrease dramatically as LED efficacy increases over the next 5 years. Source: U.S. Dept. of Energy.

Metric	Unit	2009	2010	2012	2015
LED Efficacy (2800–3500K, >=85 CRI)	lm/W	83	97	114	138
LED Price (2800–3500K; 350 mA)	$/klm	46	25	11	4
LED Efficacy (4100–6500K, 70–80 CRI)	lm/W	132	147	164	188
LED Price (4100–6500K; 350 mA)	$/klm	25	13	6	2
OEM Lamp Price	$/klm	130	101	61	28

0362-0972/01/2010-016$1.00 + .00 © SID 2010

and procurement and operating costs. It also means that the cost of producing LEDs needs to be reduced over time. The upfront cost of LEDs (compared to many other types of lighting) influences payback time and the total cost of ownership (TCO). TCO and payback time are continually improving as overall efficiencies improve. Also, the relationship between light output and power consumption needs to be improved. LEDs in the future will differ from their 2009 counterparts in terms of higher current-carrying capacity, greater standardization, and a larger number of application-oriented products.

The good news is that prices for LEDs have fallen over the past 10 years by a factor of 10, and this trend is continuing at a rapid pace. With a dramatic anticipated increase in efficacy at the component level by 2015 and a corresponding reduction in price from the present levels for LEDs and for OEM luminaires as shown in Table 1, warm white (2800–3500K, with a color-rendering index (CRI) greater than or equal to 85) and cool white (4100–6500K, with a 70-80 CRI) LEDs will become the light source of choice.[1]

Today's high-brightness LEDs provide highly efficient directional light and greatly increased efficiency. Figure 1 shows the results being achieved in the laboratory that point the way to increased efficiency in the near future.

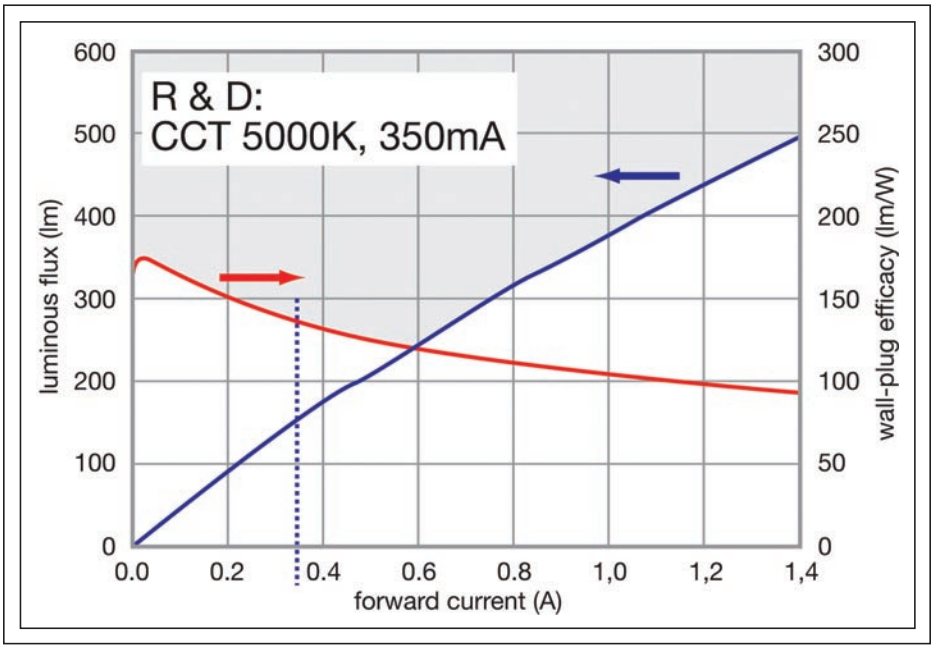

Fig. 1: *At a correlated color temperature (CCT) of 5000K and a forward current of 350 mA, LEDs now under development achieve a luminous flux (blue line) of approximately 140 lm with a wall-plug efficacy (orange line) of approximately 135 lm/W.*

Energy Efficiency

Replacing existing installations today with the best available LED alternatives would save 30% of the energy going to lighting, according to the ELC (European Lamp Companies) Federation. In the future, combining LEDs, sensors, and embedded software in ambient intelligent lighting networks has the potential to save an additional 30% by 2030.

For example, a bulb-shaped LED lamp with a screw base containing six OSRAM Golden DRAGON LEDs can fully replace a 40-W incandescent lamp, producing the same amount of light as the incandescent lamp and consuming only about 8 W of power, achieving an efficiency of approximately 43 lm/W.[2]

Controlling Color

LEDs provide excellent color rendering and uniformity of light, *i.e.*, a higher quality of light. As semiconductor products, white LEDs are sorted in a process known as binning [see Figs. 2(b) and 2(c)] so that customers get precisely the color locations and brightness they need for their particular applications.

LEDs emit light in saturated colors and offer a greater variety of colors than has ever been possible before. "Saturated" colors have a narrow spectral bandwidth and are found along the edges of the CIE 1931 chromaticity diagram. Chip technology (InGaN *vs.* InGaAlP) and doping are responsible for these colors. Specialty colors ("color on demand") can also be created using phosphor blends. These have a broader spectral bandwidth, but still have a strong spike.

All nuances of color are possible. Solid-state-lighting (SSL) systems provide the ability to tune the chromaticity of light emitted from a luminaire, depending on the application. Similarly, a wide variety of colors, not limited to the Planckian locus, can be created *via* manipulation of red, blue, and green LEDs within a luminaire. This manipulation of color temperature and/or chromaticity can be accomplished *via* pulse width or linear modulation of the separate (warm and cool, or red, blue, and green) LED currents. (Note: The Planckian locus or curve is the path or locus that the color of an incandescent black body would take in a particular chromaticity space as the blackbody temperature changes. It describes a physical phenomenon that defines how people perceive colors as familiar and agreeable.)

Regulatory Compliance

An important part of the overall LED-lighting picture involves metrics. New technologies require new standards and testing benchmarks. From an industry perspective, standards and regulations provide a platform for a consistent language with regard to definitions, test methods, and laboratory accreditation; as well as for product design, manufacturing, and testing. From a governmental perspective, regulation helps ensure public safety, provides consumer protection, regulates energy consumption, and monitors environmental issues.

Initial standards established in 2008 are being used as guidelines for programs such as Energy Star. Over the past few years, several new standards have been issued and numerous others are currently in the developmental stage. Since 2008, the industry has seen the publication of ANSI C78.377 addressing chromaticity, LM-79 addressing luminous flux, and LM-80 covering lumen maintenance.

Energy Star, a joint program of the U.S. Department of Energy and the U.S. Environmental Protection Agency, is the most recognizable symbol of energy-efficient products in the U.S. Energy-Star-qualified products are supposed to use less energy, save money, and help protect the environment. The program is now focusing on lighting applications and products that have advanced to a point where performance is equal to or better than conventional lighting technologies, based on light output, luminaire efficacy, and cost.[3]

Early in 2008, the American National Standard Lighting Group (ANSLG) published ANSI_NEMA_ANSLG C78.377-2008, entitled "Specifications for the Chromaticity of Solid State Lighting Products." This standard specifies the range of chromaticities recommended for general indoor lighting with SSL products, and ensures that the white-light chromaticity of the products can be communicated to consumers. It applies to LED-based SSL products with control electronics and heat sinks incorporated.

The ANSI chromaticity specification, as shown in Fig. 2(a), has been incorporated as the color standard for the Energy Star LED classification. Its goals are that it be as consistent as possible with existing fluorescent-lamp standards and reflect the current (and near future) state of SSL technology and color binning capabilities. Each of the eight quadrangles overlaps the six current ANSI seven-step MacAdam ellipses (consistent with the current Energy Star lighting criteria). Each quadrangle is defined by the range of correlated color temperature (CCT) and the distance from the Planckian locus on the chromaticity diagram.

LED manufacturers have altered their binning schemes to accommodate this ANSI standard for SSL products. For example, Fig. 2(b) shows how OSRAM's white fine binning (defined by the orange lines) is segmented to correspond with the ANSI quadrangles (as defined by the black lines).

Figure 2(c) shows how white fine binning accommodates applications in which precise color matching is critical. Each bin fits inside a three-step MacAdam ellipse, representing the limit of color difference that can be perceived by the human eye.

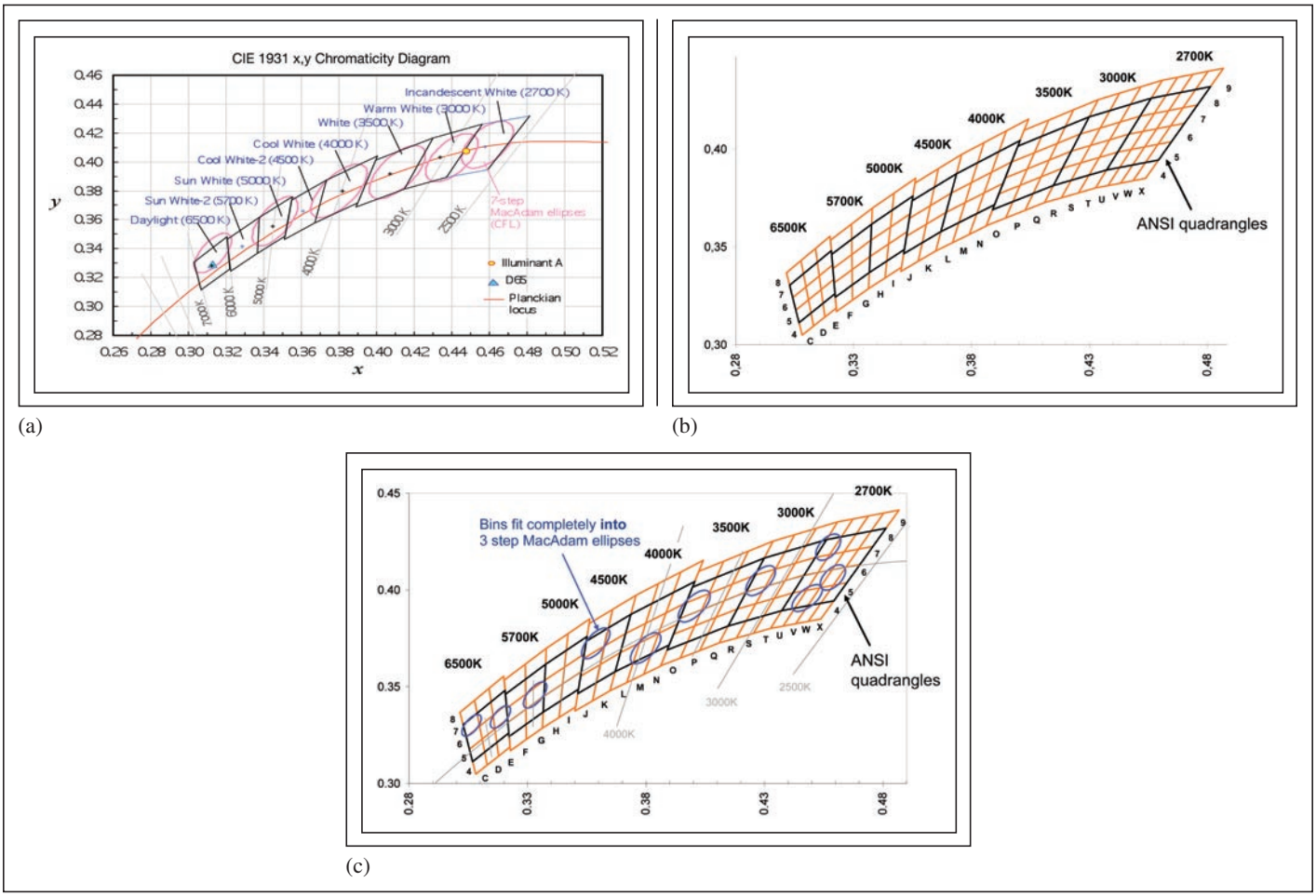

Fig. 2: (a) The American National Standards Institute's chromaticity specification is based on the CIE 1931 XYZ color space created by the International Commission on Illumination (CIE) in 1931. (b) White fine binning of LEDs (defined by the orange lines) is segmented to correspond with the ANSI quadrangles (as defined by the black lines). (c) White fine binning accommodates applications in which precise color matching is critical.

In June 2008, the Illuminating Engineering Society of North America (IESNA) published a documentary standard LM-79 entitled "Electrical and Photometric Measurements of Solid-State-Lighting Products." This standard describes the prescribed methods for testing the photometric characteristics of SSL products (luminaires) such as total luminous flux (lumens), luminous efficacy (lm/W), luminous-intensity distribution (candelas), chromaticity coordinates, CCT, and CRI.

The more recent LM-80 standard describes the measurement of lumen maintenance of LED light sources as well as LED packages, modules, and arrays (but not luminaires). LM-80 outlines the approved method for measuring lumen depreciation of solid-state (LED) light sources, arrays, and modules.[4]

Underwriters Laboratories is currently developing a safety standard for "Light-Emitting Diode (LED) Light Sources for Use in Lighting Products," which will be designated UL standard 8750. Currently, UL has an "Outline of Investigation" in place (also numbered 8750) that references all existing UL standards applicable to LED-lighting products. The purpose of the outline is to provide a comprehensive approach and listing of applicable standards for UL treatment of lighting products based on LEDs. The outline will be used until the full LED-specific document is completed.[5]

The LED Package

How LEDs are packaged is critical to performance. An important factor here is the beam characteristic from the LED package and, ultimately, the size of the LED. An optimized package will lead to performance gains and cost savings. For example, an LED that can offer top efficiency at higher currents up to 1 A will enable cost-efficient resource-saving designs that require not only fewer LEDs but also fewer and smaller peripheral components (ideal for "green" lighting solutions). Optics can also be integrated into the LED package, which optimizes coupling into secondary optics and, in some applications, eliminates the need for secondary optics completely.

Use of a ceramic package (as opposed to a plastic one) has improved the thermal management properties of SSL LEDs, and manufacturers are continuing to shrink the package size. Figure 3 shows ceramic LED packages from three manufacturers that illustrate today's dramatic improvements in footprint size.

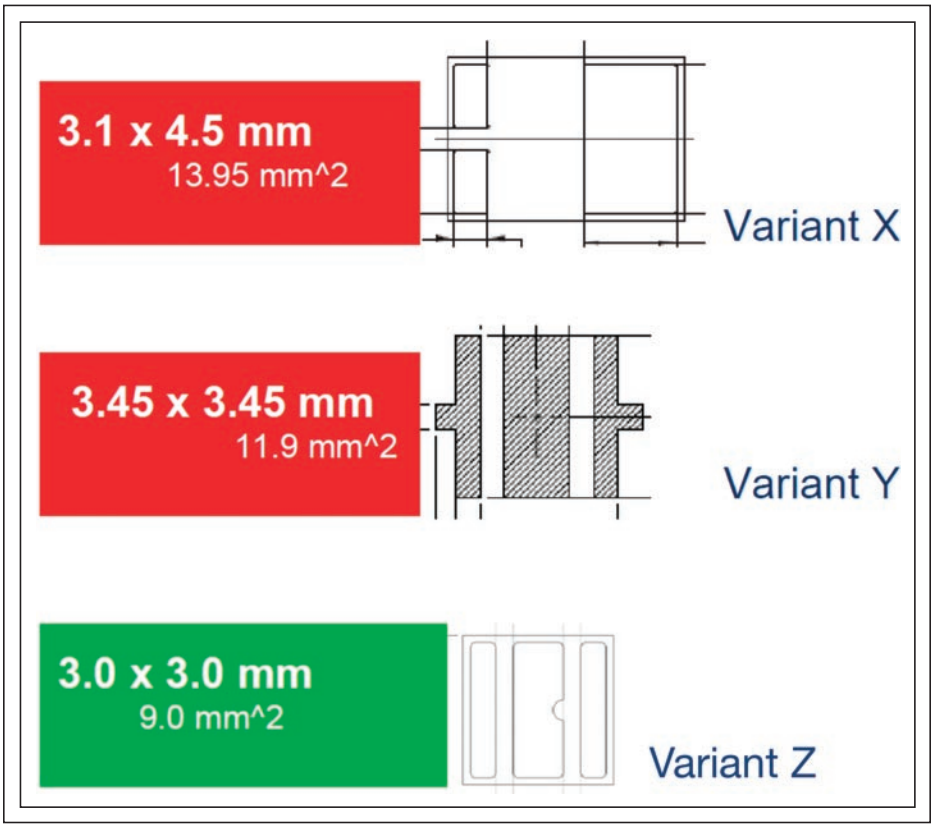

Fig. 3: LED package sizes come in a variety of compact sizes; those above from three LED manufacturers range from 3 x 3 mm to 3.1 x 4.5 mm.

Development of new chip architectures in conjunction with improved epitaxial growth technology, improvements in the phosphor converter, and high-efficiency packaging are already yielding laboratory prototypes of warm white LEDs with a chip surface of only 1 mm^2 that combine a color temperature of 3000K, a CRI of 82, and an efficiency of 104 lm/W.

Indoor Lighting

LEDs are available today that are reliably efficient at high current and meet the required standards for general lighting usage in a wide range of indoor applications, including "architainment," hospitality, shop, office, industrial, and residential. LEDs are increasingly being used for special applications with demanding requirements in terms of efficiency and lifetime, such as lighting of freezer cases in supermarkets, for example. LEDs can be used to create shopping experiences designed to stimulate customers with a better accentuation of products on display. In offices, LEDs can be used to create lighting adaptable to individual needs, enhancing worker concentration and increasing productivity.

In architainment, the hybrid of entertainment and architecture, designers are installing customized lighting in hotels, restaurants, lounges, and nightclubs, as well as architectural lighting for office buildings, shops, and private residences. These market segments are showing enormous growth. In the future, retrofitting will become increasingly important, as LEDs become the standard light sources for general lighting and gradually supplement or replace conventional light sources.

Outdoor Lighting

Outdoor applications for solid-state lighting include building facades, floodlights, landscaping, public places, parking lots, and street lighting. Use of SSL enables high-quality street lighting with better visibility, natural color rendering, less glare, and high application efficiency. LEDs are also considered promising in this area due to their long service life and reduced maintenance intervals.

Through custom optics, light can be targeted to a specific area or position, providing more uniform coverage, eliminating hot spots and spill-light, and reducing up-light, which is a major contributor to light pollution. LEDs with an integrated lens can be employed that eliminate the need for secondary optics, making the design process easier, and the silicone lens materials used can also ensure long lifetime and reliable performance [Figs. 4(a) and 4(b)].

LEDs for SSL outdoor lighting are fully dimmable so the light output can be adapted to the light level of the surrounding environment, saving electricity and reducing light pollution. The use of ambient-light sensors can enable streetlights to adjust light levels based on how dark it is. Ambient-light sensors (as shown in Fig. 5) are photodetectors that are designed to perceive brightness in the same way the human eye does and are proving to be a most effective solution compared to standard a-Si wherever the settings of a lamp need to be adjusted to ambient-light conditions as they would be perceived by humans. In addition, proximity sensing can enable streetlights to change intensity when a person or vehicle is detected. Proximity sensing can be achieved by using infrared emitters and detectors.

Conclusion

LED-based lighting continues to gain momentum against conventional lighting. LEDs are already well-established in areas such as architainment and hospitality as well as digital signage. Now, they are rapidly expanding into general lighting in dozens of mainstream applications (such as street, shop, office, and home) where they provide superior luminance, more genuine light, greater energy efficiency, color control, minimal heat, and longer life, with fewer environmental issues. And as the price/performance ratio of LEDs continues to improve, their higher upfront cost is becoming less and less of an obstacle to increased market penetration.

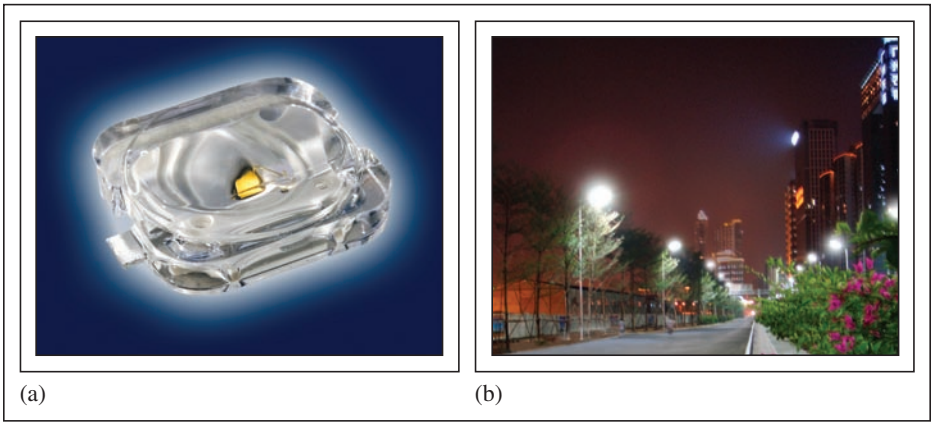

(a) (b)

Fig. 4: Light can be targeted through custom optics, such as employed in (a) OSRAM's Golden Dragon Oval Plus used in (b) the street scene. Its oval radiation pattern delivers directed light, putting the light where it is needed on the road surface for homogeneous illumination.

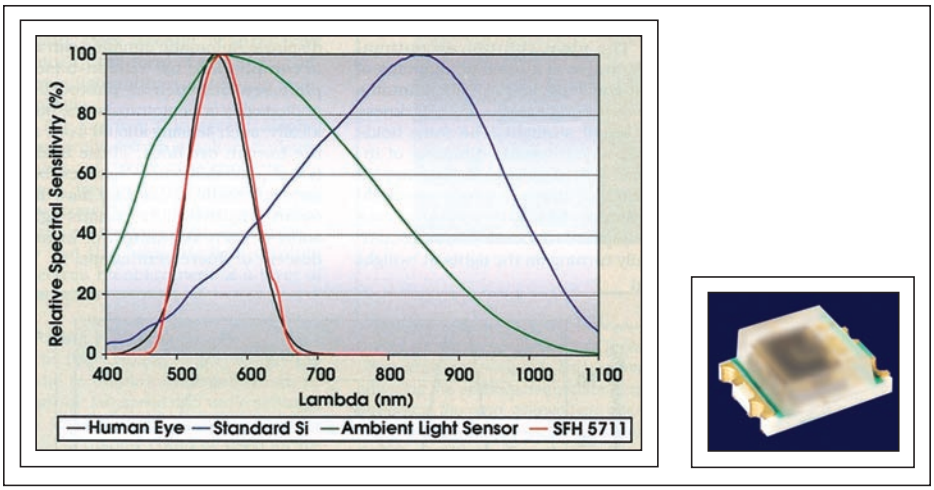

Fig. 5: Spectral sensitivity of a standard Si detector and an ambient-light sensor (SFH 5711 inset) are compared to the human eye (V-lambda).

References

[1]Source: U.S. Dept. of Energy MYPP (Multi-Year Program Plan) and survey of commercial device prices.
[2]http://www.osram-os.com/osram_os/EN/About_Us/We_shape_the_future_of_light/Our_obligation/LED_life-cycle_assessment/LED_Benefits/index.html).
[3]U. S. Department of Energy.
[4]Understanding IES LM-79 & IES LM-80, by Eric Richman, Pacific Northwest National Laboratory, U. S. Department of Energy.
[5]U. S. Department of Energy. ■

Journal of the
SOCIETY FOR INFORMATION DISPLAY

The following papers appear in the February 2010 (Vol. 18/2) issue of *JSID*.
For a preview of the papers go to sid.org/jsid.html.

SID
SOCIETY FOR INFORMATION DISPLAY

The Transition from Driving LED Backlights to Driving Solid-State Lighting

The secret to getting the most from LED solid-state lighting is to understand that different topologies must be implemented for different applications.

by Graham Upton, Michael Keene, and Michael Kretzmer

THE LIGHT-EMITTING DIODE (LED) has come a long way from its humble beginnings as a simple indicator light to the basis of the plethora of applications for which it is used today. Market analysis suggests that it is relatively early in the LED's development, and that as it continues to mature over the next few years, we will see numerous industries greatly transformed by the introduction of today's higher-efficacy, lower-cost LEDs. Those of us in the display industry have watched as LEDs slowly infiltrated some of the smaller display backlights and recently spread to the medium- and larger-sized LCDs.

As the LED is adopted into different mediums, special attention should be paid to the way in which LEDs are electrically controlled in order to maximize the total value of the design. Although great advances have been made in IC and LED driver design, there is no one-size-fits-all LED driver. Today's savviest designers and integrators let their application needs and functional requirements dictate the best type of driver to install in their application. Prior to selecting an LED driver for an original-equipment-manufacturer (OEM) display, for example, Endicott Research Group encourages integrators to prioritize the features that will influence the selection. Some of the key parameters include size, cost, efficiency, power, noise, dimming, and flexibility. Often the driver design will be partially dictated by decisions made higher up in the supply chain (for example, LED string configurations). This phenomenon is in no way unique to the display industry and factors into other areas of solid-state lighting (SSL). This article will highlight some of the standard topologies currently employed to drive OEM LED-backlit displays and move on to discuss some of the major hurdles that inhibit a generic LED driver from being implemented directly into general lighting.

Michael Keene is the Head Design Engineer for Solid-state Lighting Projects; Michael Kretzmer is Director of New Business Development, Solid State Lighting; and Graham Upton is Vice President, Engineering and New Business Development, at Endicott Research Group. They can be reached at SSL@ergpower.com.

AC/DC LED Drivers for SSL

The International Electrotechnical Commission (IEC) and American National Standards Institute (ANSI) have defined requirements for power-factor and input-current harmonics generated by power supplies fed by AC line voltage. These requirements vary depending on application, and both agencies have specific requirements for lighting equipment. Power factor is defined as the ratio of real to apparent power being consumed by an electronic device, which speaks to the phase relationship between current drawn from the line and line voltage. When the input current consumed by an electronic device is linearly proportional to and in phase with the input voltage (as with a purely resistive load), the power factor is said to be unity (or 1) [Fig. 1(a)]. A power factor of unity is ideal because it reduces distribution losses and contributes little noise and distortion to the line.

When a load is composed of either nonlinear or reactive circuit elements, the power factor deviates from unity. If a load is linear, capacitive, and resistive, the input current will lead the input voltage [Fig. 1(b)]. If a load is linear, inductive, and resistive, the input current will lag the input voltage. In either case, the apparent power (the instantaneous product of voltage and current) will not equal the actual power. One reason why agencies such as IEC and ANSI have imposed limits on the difference between real power and apparent power is that many power utility meters measure apparent power.

Bridge Rectifier and Bulk Capacitor in AC/DC Converters

Before power factor and current harmonic limitations were adopted, the majority of single-phase power supplies consisted of a bridge rectifier and bulk capacitor, which would convert the incoming AC into DC with some ripple. That ripple would then be filtered out by additional passive filters or active regulators, creating smooth DC power. While this circuitry is inexpensive and simple to implement (and still commonly used in low-wattage supplies today), the combination of bridge rectifier and bulk capacitor consumes nearly all of the input current during a brief period when the sinusoidal input voltage waveform is

0362-0972/01/2010-022$1.00 + .00 © SID 2010

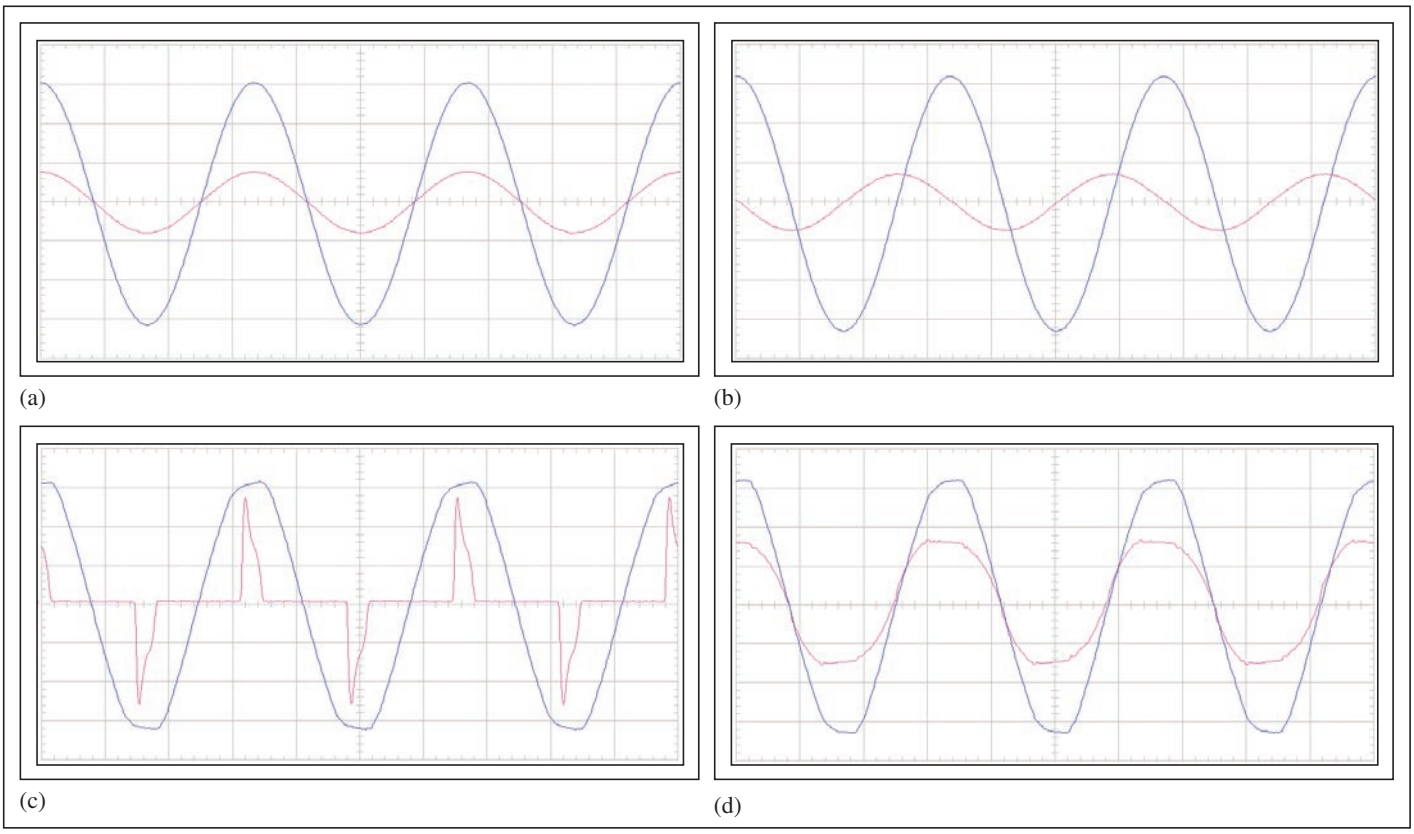

Fig. 1: In charts (a)–(d), the input voltage is represented by the blue line and input current by the pink line. (a) Unity power factor. (b) Non-unity power factor. A 90° phase shift between input current and input voltage is the result of a capacitive load. (c) Input voltage and current waveforms typical of the bridge rectifier and bulk capacitor combination. (d) Typical input voltage and current waveforms for a PFC circuit.

at its peak, creating a highly distorted input-current waveform [Fig. 1(c)]. The reason this brief current draw occurs is that the bridge rectifier is not forward-biased and conducting until the instantaneous line voltage exceeds the DC voltage across the bulk capacitor. (As stated, this current draw only occurs at the peak of the input voltage waveform.) Consequently, these input-current spikes reduce the efficiency of the power distribution network because the instantaneous power lost in the line is equal to the square of the input current multiplied by the line resistance. In addition to this reduction in efficiency, the line voltage becomes distorted near the peak of the sinusoidal waveform [notable in Figs. 1(c) and 1(d)] when the distribution network is excessively loaded with devices utilizing this configuration of AC/DC conversion. In order to control the current draw from the line, an active power-factor-correction (PFC) circuit may be used. Figure 1(d) shows the typical input current draw for an active PFC circuit.

Power-Factor-Correction Circuit

In order to reduce the input-current harmonics that the bridge rectifier and bulk capacitor AC/DC conversion circuit create, and to keep the current drawn by the power supply in phase with the input voltage, a circuit very similar to that shown in Fig. 2 can be utilized. This circuit, based upon a pulse-width-modulating (PWM) boost converter, is popular and well documented, although it is not the only currently utilized active PFC topology.

The main difference between a "boosting" PFC and the boost converter is that the PFC circuit modulates its input-current consumption in order to create an input-current waveform that approximates that of a resistive load. In Fig. 2, this input-current shaping is achieved by sampling the input voltage (in the U.S., a

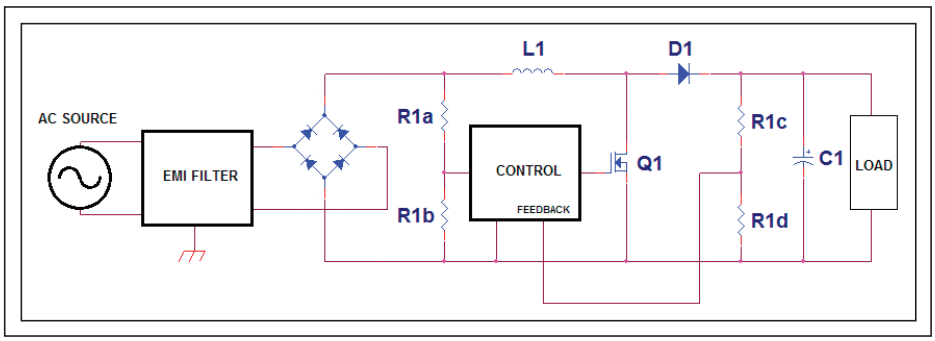

Fig. 2: This typical resistive network configuration shows the non-isolated PFC stage.

120-Hz rectified version of the input voltage) and modulating Q1 on time so that the circuit consumes a nearly sinusoidal input current that matches the input voltage in frequency and phase. The resistive network seen in Fig. 2 is not always the scheme used for determining the correct modulation of input current, but is a popular one nonetheless. The main reason a boost converter is the basis of most active PFC circuits utilized today is that the boost can draw input current from the line from just above 0 V to the peak of the AC waveform, limiting input-current distortion.

PFC circuits generally require a large amount of output filtering capacitance (C1) because they pass a large amount of low frequency to the output when modulating the input current. These circuits also generate very high output voltages, typically 200–400 V or more (they can only boost the 110 or 220 V coming in!), requiring the addition of a conversion stage between the PFC output and the load circuitry. The high output voltage of the boost converter is not generally desired; it is merely a by-product of the architecture. In addition to the current-control circuitry an active PFC incorporates, nearly all switching converters connected to the line require a complex filter at their input to reduce the noise they generate back to the utility and to filter the noise coming off the line.

The Two-Stage Approach to AC/DC Conversion

The typical loads that an AC/DC converter driving a series string of LEDs will power often run on 48 V or less (nowhere near the 200 V a non-isolated PFC converter will output in many cases). Therefore, a DC/DC converter (usually one that isolates the output from the input *via* a transformer) generally follows the PFC and is used to convert the high-voltage output from the power-factor corrector to a voltage or current suitable to drive the load. The advantage of this configuration is that the converter driving the load directly is supplied with a mostly DC input voltage, allowing the supply to have high-input rejection and high-load regulation. If properly configured, the power stage is capable of driving multiple LED strings and providing an isolated output. One drawback to this configuration is that the losses from the PFC and DC/DC converter are in series, typically limiting the efficiency to the high 70% and low 80% range. Because LEDs are a disruptive technology for general lighting – and because expectations about the energy savings inherent in switching to SSL are so high – driving at a high efficiency is critical. This configuration also requires a significant number of components and board layout space for two power converters, which results in a large footprint and high cost.

A Single-Stage Approach to AC/DC Conversion

One way to limit power-supply footprint and part count is to change the configuration of the PFC from a boost to a flyback converter and to add a stage of isolation to the feedback network. This circuit (Fig. 3) achieves AC/DC conversion and enables the PFC stage to create an output voltage that is greater or less than the input voltage. The circuit also achieves output isolation, which is necessary in many general lighting applications. The flyback transformer (T2), in which power is transferred from line to load, operates nearly the same as the boosting inductor in Fig. 2, with current flowing in the primary during Q2 on-time and in the secondary during Q2 off-time. Considering input current, the main difference between the boost and flyback configuration is that the flyback circuit does not draw current when Q2 is off. The rest of the circuit operates in the same way as a non-isolated boost PFC. This configuration, if properly implemented, can achieve efficiencies in the high 80% to low 90% range and can reduce cost when compared with the two-stage approach. Poor line rejection and mediocre load regulation are inherent to this circuit's operation; therefore, it is only recommended for driving loads such as LEDs that are not highly susceptible to moderate ripple and voltage variations. This circuit forms the basis of a single-string current source, as well as a multiple-string current source, which will be discussed shortly.

Those with experience in driving LEDs know that it is not enough simply to have clean DC power because LEDs need to be driven by a constant-current source in order to avoid thermal runaway and other failure-mode effects. Indeed, the low-voltage output described above does require additional hardware to provide the constant current for the LEDs. Regardless of how it is labeled, this style of low-voltage output is a popular mode of powering LEDs because it allows the integrator a great deal of flexibility with the load and reduces the number of different power supplies that have to be stocked. For example, a lighting designer may configure from 1 to 11 strings of up to 6 or 7 LEDs to a single 100-W 24-V single-output power supply. Of course, each string requires a constant-current provider. The alternate method is to use a power supply that includes a constant-current source onboard, but one is needed for each string of LEDs that must be driven. Both methods have several advantages and disadvantages, as shown in Table 1.

Power-Factor-Correction Circuit with Current Output

With a simple modification that converts the output-voltage feedback network to an output-current feedback network, the power-factor-correction circuit shown in Fig. 3 will maintain a constant output current as opposed to a constant output voltage. This change in the feedback configuration is identical to that between the PWM voltage boost and PWM current boost (both driven by DC as opposed to AC sources, and neither requiring output isolation). As with the PWM boost, this cir-

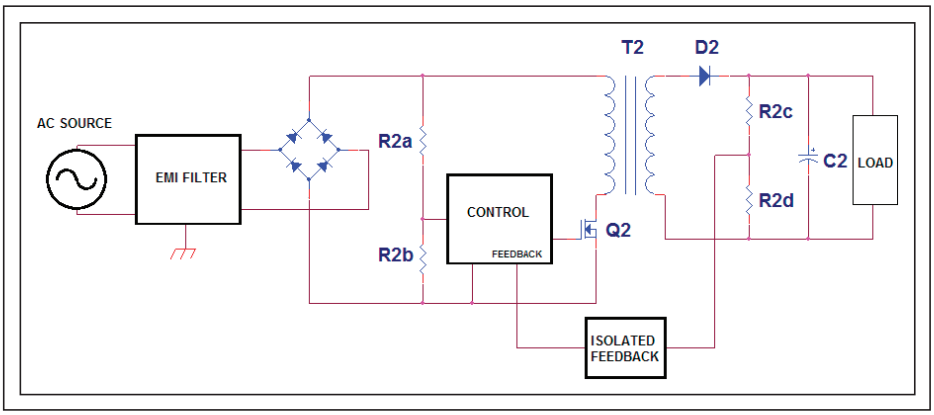

Fig. 3: This PFC incorporates isolated output.

Table 1: Comparison of driving methodologies.

		Input		Single Output	
		Two Stage AC to DC	**Single Stage AC to DC**	**Constant Voltage**	**Constant Current**
AC to DC	Pros	Relatively simple circuits: boost non-isolated PFC & isolated DC to DC, high-load regulation, flexible	Fully isolated flyback PFC, Highly efficient ~90%, economical, smaller sizes possible	Allows for a great deal of flexibility – can "drive" several strings in parallel, fewer part numbers need to be stocked	Driver is optimized for the load → Highest possible efficiencies
	Cons	Inefficient (two stages in series) → ~80%, requires three stages for multiple output driver → ~70% relatively large, potentially more expensive	More complex circuit, poor line rejection & load regulation → Loads should not be susceptible to ripple/voltage variations, requires second stage for multiple output driver	Requires additional hardware to provide constant current, stocking 1 part number → May be more power than you need	Driver is specific to LED string configuration – lack of flexibility
	Apps	Applications requiring tight output regulation with quick transient response	General lighting, very-high-efficiency requirements (for energy savings payback: street lighting, parking, high bay, refrigeration, *etc.*), smaller package requirements, cost-sensitive applications	For lighting integrators handling a large variety of lighting configurations with multiple strings	High-volume applications, applications requiring the highest efficiency

cuit will only drive one LED string. As discussed for the previous circuit, the single-stage approach will not achieve the input rejection or load regulation that the two-stage approach is capable of, but because an LED string is a static, moderately insensitive load, only marginal output regulation is required. Because calling an LED load "moderately insensitive" is a qualitative assessment, it is necessary to note that LEDs do not require an extremely low ripple supply to create a uniform and consistent perceived brightness. Moderate PWM dimming ratios are achievable, although LED current-amplitude modulation as opposed to PWM may be required in many situations. The drawbacks of PWM dimming are currently the subject of debate among many engineering and also healthcare professionals. Dimming *via* PWM requires that all dimming circuits be locked together (or synchronous) in frequency; otherwise, beat frequencies, or perceivable "flicker," can occur. When dimming is synchronous, the frequency must be high enough that the human eye does not perceive any "strobing" (the human eye can perceive frequencies well above 120 Hz in some cases). This "strobing" can create health issues for those with epilepsy and also pose a hazard for operators of heavy machinery in industrial environments where the perception of motion is key.

The Linear Current Source

Linear current sources are the most widely used current sources in low-power applications (including many OEM LED displays) due to their small size and lack of a costly magnetic component. Linear current sources are relatively easy to implement and many fully integrated adjustable voltage regulators can be easily configured as a linear current source. While there are many different linear-current-source topologies, one of the most widely used is seen in Fig. 4. This circuit is the design upon which many popular IC voltage and current regulators are based. U3 acts as the "brains" of the circuit, continuously comparing the amount of current flow through the load to a reference level and making adjustments (*via* Q3) if necessary. The main advantage of a linear current source is the low parts count, low cost, and relatively small size. The main disadvantage to linear current sources is that they require greater headroom (and therefore dissipate more power) than switching current sources, such as the hysteretic and PWM current sources. This power dissipation inherent to linear current sources limits them to lower power applications or applications that can tolerate large heat sinks and higher device junction temperatures.

Adaptive Power-Factor-Correction Circuit with Linear Outputs

In order to drive multiple strings with an AC input, one might consider integrating an adaptive PWM boost-circuit feedback scheme with the PFC controller. The PFC portion will work the same as the low-voltage circuit, but will regulate its output voltage based on linear-current-source headroom levels, as shown in Fig. 5. This circuit will work best in lower-

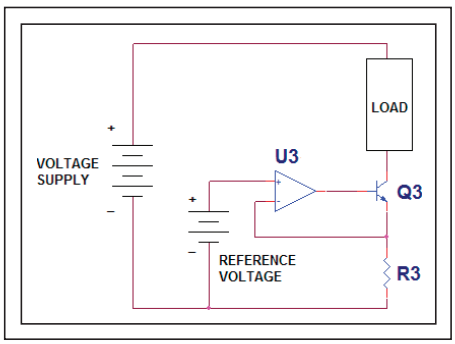

Fig. 4: This type of basic op-amp-based linear current source is widely used.

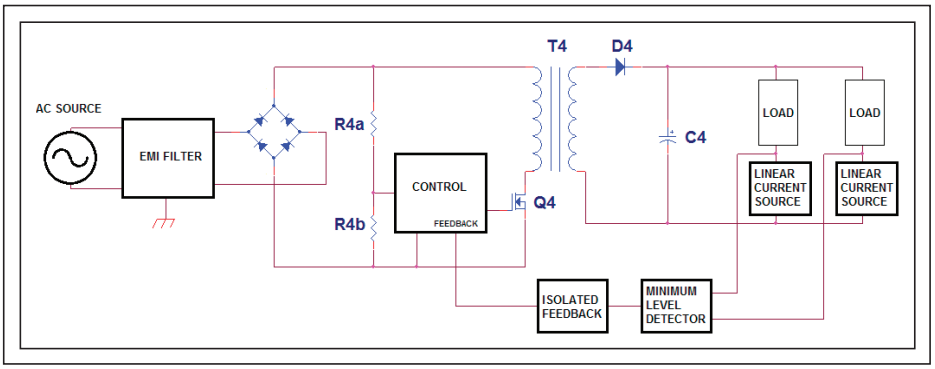

Fig. 5: This adaptive PFC has multiple linear-current-source outputs.

power applications and applications where there is adequate heat management because the power dissipated in the linear-current-regulating devices will cause those devices to heat excessively unless they have an adequate junction to ambient thermal resistance. Excellent dimming ratios are achievable with this circuit utilizing PWM. The discrete linear current sources, with fast transient response, adequately reject PFC output variations and regulate the load.

The Hysteretic Current Source

Hysteretic current sources are switching current sources. A hysteretic current source will turn on for a period of time in which a rising current is delivered to the load (the inductor will determine the rate of rise). During this period, the extra "headroom" power that is normally dissipated in a linear current source is stored in the inductor. Once the rising current in the load reaches a pre-determined level (typically 10–20% above the desired output current), the circuit is disconnected from the supply and the energy stored in the inductor is delivered to the load. Once the current passing through the series combination of storage inductor and the load falls to a second pre-determined level (typically 10–20% below nominal output current), the circuit is connected to the supply again, restarting the cycle. Even though the load current is at the desired level for only two very brief moments during the ramp-up and ramp-down cycle, the average current is held to the desired level. Hysteretic current sources hold the advantage of lower power dissipation over linear current sources, thus increasing their efficiency and giving them the ability to drive higher power loads with fewer thermal considerations than linear sources. Hysteretic current sources are typically more expensive than linear current sources due to their need for a fast-switching field-effect transistor (FET), fast-clamping diode, and large inductor for energy storage. Both hysteretic and linear current sources exhibit fast transient response, which can allow for extremely high dimming ratios (Fig. 6).

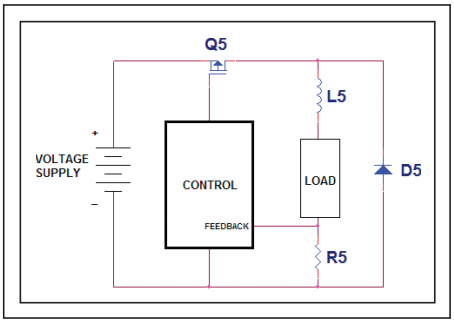

Fig. 6: The hysteretic current source is a type of switching source.

Power-Factor-Correction Circuit with Hysteretic Outputs

For higher-power multi-string applications, a variation on the previous circuit with hysteretic converters and a fixed-voltage output is feasible. This PFC circuit, as shown in Fig. 7, maintains the high efficiency and excellent thermal characteristics of the hysteretic output stages, while achieving extremely high dimming ratios. The hysteretic current source exhibits exceptional rejection of PFC output variations and excellent load regulation.

EMI Filter

EMC norms dictate maximum conducted and radiated emissions that electronic devices can create within the range of hundreds of kilohertz to tens of megahertz. In addition to the limitations on emissions, electronic devices are required to meet defined levels of immunity to conducted and radiated interference signals. Devices must also repeatedly survive transient surges of energy in order to work reliably when powered off-line. To achieve compliance with these norms and ensure reliable operation over device lifetime, a passive EMI filter is generally utilized as an interface between the wall source and AC/DC converting power supply. The design of this filter is a complex and iterative process, beyond the scope of this article.

Conclusion

As LEDs continue to gain acceptance in more and more applications, the demands on the driver continue to increase. This presents unique challenges and opportunities for driver manufacturers working to keep pace with lighting designers and integrators. The key to getting the best value from SSL is to understand that no one solution is the answer for all applications. There are a variety of different topologies, each providing the best solution for certain applications, and the desired results of the application should be considered at the outset when choosing an LED driver design. ■

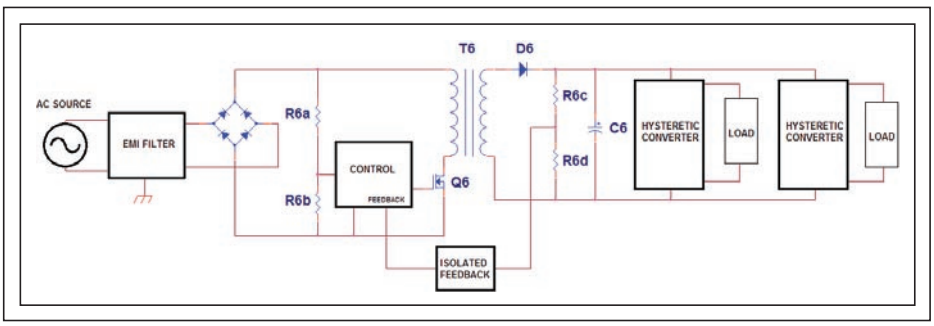

Fig. 7: A PFC can incorporate multiple hysteretic-current-source outputs.

Solid-State Lighting for the General-Illumination Market

Both LEDs and OLEDs show promise in various residential, industrial, and institutional applications.

by Jenny Donelan

MAINSTREAM MEDIA has definitely taken notice of solid-state lighting. The year 2009 seemed to be one of burgeoning awareness. The *New York Times* ran numerous articles on the subject, among them "Green Promise Seen in Switch to LED Lighting."[1] A piece on the retail availability of LEDs titled "New Lighting Technology Gaining Ground" appeared in the *San Jose Mercury News*.[2] Even more regional, specialized publications such as *New Hampshire Home* took on solid-state lighting (SSL), with articles such as " Energy-Efficient Lighting" that discussed cutting-edge LED light fixtures for the household.

The argument for SSL technologies such as light-emitting diodes (LEDs) and organic light-emitting diodes (OLEDs) is primarily environmental and economic (with the latter on a long-range basis). LEDs use much less energy than, *e.g.*, a typical incandescent lightbulb and last much, much longer – in many cases, years longer. (For a detailed list of the benefits of LEDs as a general illumination technology, see "LEDs Come to the Forefront of General Lighting Applications" in this issue.) SSL technologies also offer a wide range of artistic possibilities, including color, dimming, dynamic control of color and dimming, and new types of shapes for the lights themselves. "They can be used for illuminating surfaces," says Jill Klingler, who handles Marketing Communications for Philips Color Kinetics, the LED division of Philips. Tables, ceilings, walls, and floors can become new lighting media, as shown in Fig. 1.

Thus, a sea change of sorts has begun, even if, as usual, it is building more slowly than media coverage might indicate. Although SSL is still in its infancy – "The penetration is probably on the order of 1% in terms of [overall] lighting," says Robert Steele, Director,

Fig. 1: *A dining room in a Mexico City residence features glass panels recessed into the floor and illuminated by LED units. The panels form a color-changing frame around the table, and a series of eight preprogrammed light "shows" allow the homeowner to change from romantic, subdued hues to more festive shades. Image courtesy Grupo G1-V3.*

Jenny Donelan *is the Managing Editor of* Information Display *magazine.*

0362-0972/01/2010-027$1.00 + .00 © SID 2010

LED Practice, for market-research-company Strategies Unlimited – "this year and especially the last have seen a flood of LED lighting products, from very small companies to large ones such as Philips." Philips is one of the "big three" players in SSL, in addition to General Electric and OSRAM.

According to a recent report from Strategies Unlimited, the overall LED market will increase over the next 5 years at a total compound annual growth rate of 24%, reaching $14.9 billion in 2013. And SSL will be a vital part of that growth. Both SSL and LCD backlighting will be the main drivers in the LED industry's recovery in 2010, according to the report, with mature markets such as automotive lighting and mobile phones slowing down a bit.

Lighting Trends

In terms of actual usage, some applications, such as LEDs in institutional and industrial settings, are happening here and now; others, such as OLEDs in home lighting fixtures, are farther off. In the U.S., notes Steele, LED lighting is being used primarily in companies and institutions rather than in homes. LED lighting is still far more expensive than its fluorescent or incandescent counterparts. A consumer looking to replace one light bulb can expect to pay from $40 to $100 for an LED version, he says. (LED bulbs costing as little as $10 are now available at some "big box" stores, but they tend to be of poor quality and may last only weeks or months, according to Steele.) So, at this point, "It is very hard for most residential customers to take that plunge."

The industrial/institutional sector is another matter. When light bulbs or fixtures can be purchased in bulk, and especially where they are installed in hard-to-reach areas such as high ceilings, stadiums, parking lots, *etc.*, LEDs begin to make economic sense. It costs money to pay workers to change bulbs in such environments, and obviously the less often the changing has to be done, the better.

More is happening on the residential front in Europe, where energy prices are higher and government regulations stronger. Steele points to promotions from some utility companies there that provide customers with LED bulbs at no charge up front, then charge them back a small portion of the cost in a number of subsequent bills.

Fig. 2: *The Orbeos panel from OSRAM is a round, warm-white OLED panel about 2.1 mm thick (see inset) that will be commercially available in the U.S. for about $400 each in small quantities. The Orbeos has been designed to provide even, white lighting such as that depicted in the background of the picture.*

LEDs and OLEDs

In terms of SSL, practically all the current commercial activity to date involves LEDs rather than OLEDs. According to Steele, nothing radical or recent has brought about the rise of the LED. "There has just been a gradual increase in quality year by year," he says, noting that brightness has especially improved over the last 2–3 years. "Now there are LEDs that are as bright as a compact fluorescent and approaching a linear tube." Efficiency, particularly that of white LEDs, has also improved. And there has been quite a bit of related R&D as well; drivers and other technologies are constantly improving. Add to that the ever-growing energy awareness of both the public and the state and federal governments, and the time is right for new, greener light sources. One more bonus: Neither LEDs nor OLEDs contain mercury, as do fluorescent lamps, high-intensity discharge lamps, and neon.

In December 2009, OSRAM announced the Orbeos, the first-ever commercially available OLED light source used as a panel for commercial and residential use (see Fig. 2).

Despite this offering, OLED lighting is at the very early stages of development, according to Brian Terao, Director of Solid-State Lighting Products for OSRAM. "The technology is at the premium segment of the market now," he says. In general, over the short term, "you're going to see OLED lighting used for artistic expression." One such example includes work by German lighting artist Ingo Maurer, who produced a tree-shaped table lamp (cost: approximately $10,000) with OLED panels that was featured in *The New York Times* last fall.[3]

"OLEDs will carry a price premium for at least a few years," says Ron Mertens, editor of the web portal OLED-Info.com. "OLED lighting is still in the 'lab' mostly. Several companies plan to start mass-producing OLED products in the 2010–2012 time frame. I would say, though, that it will take 3–5 years at least before OLEDs really enter the general-lighting market with the ability to compete with LEDs and fluorescents."

The Business Plan

The longevity of SSL products brings a new

twist to the lighting market. One example is an advertisement from LED-lighting manufacturer Cree that features a picture of a baby next to the caption "Imagine installing this light the day he is born…" alongside a picture of a recessed light next to the caption "And not replacing the light until he graduates from college." Light bulbs that cost upwards of $50 and last decades instead of costing less than $2 and lasting for months would seem to require a new type of business model. As Steele puts it, "It's really like selling appliances instead of razor blades." For a company such as Cree, which is new and entered the lighting business with LEDs, there's no radical shift, but for an established player such as Philips, some strategy overhaul might seem to be in order.

In fact, Klinger notes that Philips Color Kinetics was acquired by Philips, and thus represented an addition to, rather than a revamping of, the company's other businesses. Philips is constantly on the lookout for new opportunities in a fast-changing market, she says, noting "we've been acquiring a number of companies to bolster our portfolio."

How all the different lighting technologies will shake out eventually is not clear, although all signs point to LEDs being on the rise. OSRAM's Terao predicts a mix. "I don't see LEDs taking over everything," he says, "although some incandescent products will go away." He believes the future holds a mix of LEDs, OLEDs, fluorescent lamps, and other technologies. Suddenly, there's a lot going on in an industry that has changed very little since Edison demonstrated the first commercially practical incandescent light bulb in 1879, an industry that Steele describes as "very traditional." How soon will it be before those long-lasting SSL bulbs become a matter of course in the average home? It's hard to say exactly, but entirely possible to contemplate that the simple act of changing a light bulb may become a lost art (perhaps requiring a manual) by the time the next generation's children have grown up. We could be among the last generation on earth to appreciate a "how many people does it take to change a light bulb" joke.

References

[1]http://www.nytimes.com/2009/05/30/science/earth/30degrees.html

[2]http://www.mercurynews.com/science/ci_13568681?source=rss&nclick_check=1

[3]www.nytimes.com/2009/09/07/technology/07bulb.html ■

guest editorial

continued from page 4

This issue of *Information Display* will focus on the emerging field of solid-state lighting. My colleagues and I from Kodak provide an overview of next-generation SSL technologies with a focus on OLEDs. We discuss the current state of the art in SSL technology, as well as some of the barriers to commercialization and what is being done to overcome them. The next article from Chris Eichelberger (OSRAM Opto Semiconductors) discusses the latest trends in LED technology and standards development, as well as the application of LEDs to general lighting. In the third article, Graham Upton and colleagues from Endicott Research Group (ERG) describe the challenges that have been faced in designing LED drivers for backlight applications, and the new challenges that will be encountered in designing LED drivers for SSL applications such as general illumination.

Having been actively involved in OLED research and development for the last 10 years, it is exciting and refreshing to see another market emerging for OLED technology beyond displays. I've been impressed with the rapid performance improvements in white-OLED technology over the last few years, as well as the number of high-quality OLED lighting prototypes that have been displayed at recent trade shows such as Display Week 2009 and FPD International. The adoption of LED backlights into LCDs has been equally as impressive, allowing for smaller and lower-power mobile devices and thinner LCD-TV displays with higher performance than their CCFL-backlit counterparts. These trends have resulted in the SID Technical Program Committee devoting a technology track to SSL at the 2010 SID Symposium, and, of course, this year's very first issue of *Information Display* focusing on SSL.

I hope you find the articles in this issue interesting and thought-provoking. May you be enlightened by the realm of possibilities and the promise that solid-state lighting holds for our future, as we stand at the forefront of the lighting revolution. ■

***Jeffrey P. Spindler** is a technologist at Eastman Kodak Company Research Laboratories. He can be reached at jeffrey.spindler@kodak.com.*

continued from page 2

In his column this month, SID President Paul Drzaic talks about synergies with subjects covered in recent Materials Research Society conferences, including stretchable electronics and nano-materials. Automotive electronics, for example, are now being experimentally fabricated on flexible substrates for conformable driver information systems. These new concepts include gauges and displays but also sensors of many varieties. These systems will undoubtedly take advantage of the research into flexible backplanes for LC and OLED display applications.

Solid-state lighting, coincidentally the theme for this month's issue of *ID*, is also benefitting significantly from the development work being undertaken for LED backlights in LCDs. These developments include integrated driver/controller circuits, power-management systems, light sensors, thermal packaging, and, of course, the wide range of LED devices themselves. There is no doubt that the holy grail for most LED developers has always been lighting, owing to the seemingly endless volume of potential applications, but for the past 5 years, LEDs have mainly been a backlighting story, with the display industry driving the demand and investments. Now, SSL has begun to turn the corner into viability and I am very pleased that we are covering this valuable topic this month. We plan to cover several more of these types of new and important areas this year in the ongoing effort to bring you an ever more encompassing view of display-related technologies.

Our January issue features some great Frontline Technology articles on solid-state lighting that have been solicited and edited by Jeffrey Spindler from Kodak. LEDs and OLEDs show tremendous promise in terms of revolutionizing the lighting industry, as Spindler and his co-authors explain in their feature article "Next-Generation Solid-State Lighting Technology." Incidentally, Jeffrey and co-authors Steven Van Slyke and Tukaram Hatwar, along with their former colleague Ching Tang, are listed variously as inventors on a very large number of Kodak's OLED patents. Very few people know the technology as well as these authors.

Another company very involved in SSL through its innovation in highly efficient inorganic LEDS has been OSRAM, and author Christopher Eichelberger provides us with an overview of the state of the art, and also addresses some of the issues around the design of lighting devices and the landscape of regulatory and standards activities under way.

In our Making Displays Work for You segment, we get a virtual recipe book of power supply and LED driver designs from authors Graham Upton, Michael Keene, and Michael Kretzmer from Endicott Research Group (ERG). They describe the pros and cons of many different AC power-supply architectures and how to adapt them for consumer lighting applications with LEDs.

Last, but not least, Jenny Donelan covers the SSL beat by looking at the range of new lighting designs being explored, sizing up the potential market, and identifying elements of conventional lamp manufacturer business models that may need to change as this revolution comes to fruition. I am very excited about the all the possibilities, including ergonomically designed workspaces with lighting that removes stress, artistic beautification of city buildings and landscapes, and great new ways to brighten up home spaces – all at greatly reduced energy costs. I hope that this collection of articles helps bring the new era of solid-state lighting into sharp focus for you and gets you excited about the new era of lighting as well. ■

sustaining members

Advitech
Applied Concepts
Applied Photonics
Astra Products, Inc.
AU Optronics Corp.
autronic–Melchers GmbH

BigByte Corp.

California Micro Devices
CDT, Ltd.
Chi Mei Optoelectronics Corp.
Chunghwa Picture Tubes, Ltd.
Corning Japan K.K.
Cytec Industries

Dawar Technologies, Inc.
DisplaySearch
Dontech, Inc.
DTC/ITRI

Endicott Research Group, Inc.
ENEA
Epoxy Technology

FIMI

Global Display Solutions

IGNIS Innovation, Inc.
Industrial Electronic Engineers, Inc. (IEE)
Industrial Technology Research Institute
Instrument Systems GmbH
IST (Imaging Systems Technology)

Japan Patent Office

Kent Displays, Inc.
Kuraray Co., Ltd.

LXD, Inc.

Micronic Laser Systems AB
Microvision
Mitsubishi Chemical Corp.
Mitsubishi Electric Corp.

Nano-Proprietary, Inc.
NEC Corp.
Nippon Seiki Co., Ltd.
Nitto Denko America, Inc.
Noritake Itron Corp.
Novaled AG
Novatek Microelectronics Corp., Ltd.

Optical Filters, Ltd.

Parker Chomerics/Silver Cloud
Planar Systems
Plaskolite, Inc.
Polytronix, Inc.

QualComm
Quantum Data, Inc.

Radiant Imaging
Reflexite Display Optics

Schott North America, Inc.
Sharp Corp.

Tannas Electronics
Technology Research Association for Advanced Display Materials (TRADIM)
Teijin DuPont Films Japan, Ltd.
TFD, Inc.
TLC International
Toshiba America Electronic Components, Inc.
TPO Displays Corp.
Trident Microsystems, Inc.

Universal Display Corp.

Vestal Electronics A.S.

Westar Display Technologies
WINTEK Corp.

index to advertisers

Business and Editorial Offices
Palisades Convention Management
411 Lafayette Street, 2nd Floor
New York, NY 10003
Jay Morreale, Managing Editor
212/460-8090 x212
fax: 212/460-5460
jmorreale@pcm411.com

Sales Office – Europe
George Isaacs
12 Park View Court
The Paddock, Eaton Ford
St. Neots, Cambridgeshire
PE19 7SD U.K.
+44-(0)-1480-218400
george@gandg.demon.co.uk

Sales Office – China & Taiwan
Joy Wang
ACE Forum, Inc.
3F-2, No. 5, Sec. 1, Pa-Te Rd.
Taipei 100, Taiwan
+886-2-2392-6960 x204
fax: +886-2-2393-0667
joy@aceforum.com.tw

Sales Office – U.S.A.
Palisades Convention Management
411 Lafayette Street, 2nd Floor
New York, NY 10003
Michele Klein, Director of Sales
212/460-8090 x216
fax: 212/460-5460
mklein@pcm411.com

Sales Office – Korea
Jung-Won Suh
Sinsegi Media, Inc.
Choongmoo Bldg., Rm. 1102
44-13, Yoido-dong
Youngdung-gu, Seoul, Korea
+82-2-785-8222
fax: +82-2-785-8225
sinsegi-2@sinsegimedia.info

LCD TVs with Vikuiti™ Film Use Up to 37% Less Power.

Vikuiti™ Dual Brightness Enhancement Film (DBEF)—the world's first reflective polarizer—recycles light that's normally wasted in LCD devices. Adding Vikuiti DBEF can improve the efficiency of LCD TV backlights by 32–52% and can cut total TV energy use by 23–37%. A typical 46″ LCD TV with Vikuiti DBEF and two diffusers, for example, can operate on *83 fewer watts* than the same TV with three diffusers and no Vikuiti DBEF. Feel the joy—go to vikuiti.com for more information about saving energy with Vikuiti optical films.

Vikuiti™ Display Enhancement™

vikuiti.com
1-800-553-9215

Making displays more energy efficient since 1993.

3M

membership/subscription request

Use this card to request a SID membership application, or to order a complimentary subscription to *Information Display.*

PROFESSIONAL INFORMATION

1. Are you professionally involved with information displays, display manufacturing equipment/materials, or display applications?

110 ☐ Yes 111 ☐ No

2. What is your principal job function? (check one)

210 ☐ General /Corporate /Financial
211 ☐ Design, Development Engineering
212 ☐ Engineering Systems (Evaluation, QC, Stds.)
213 ☐ Basic Research
214 ☐ Manufacturing /Production
215 ☐ Purchasing /Procurement
216 ☐ Marketing /Sales
217 ☐ Advertising /Public Relations
218 ☐ Consulting
219 ☐ College or University Education
220 ☐ Other *(please be specific)*

_____

3. What is the organization's primary end product or service? (check one)

310 ☐ Cathode-ray Tubes
311 ☐ Electroluminescent Displays
312 ☐ Field-emission Displays
313 ☐ Liquid-crystal Displays & Modules
314 ☐ Plasma Display Panels
315 ☐ Displays (Other)
316 ☐ Display Components, Hardware, Subassemblies
317 ☐ Display Manufacturing Equipment, Materials, Services
318 ☐ Printing/Reproduction/ Facsimile Equipment
319 ☐ Color Services /Systems
320 ☐ Communications Systems / Equipment
321 ☐ Computer Monitors /Peripherals
322 ☐ Computers
323 ☐ Consulting Services, Technical
324 ☐ Consulting Services, Management/Marketing
325 ☐ Education
326 ☐ Industrial Controls, Systems, Equipment, Robotics
327 ☐ Medical Imaging/Electronic Equipment
328 ☐ Military/Air, Space, Ground Support/Avionics
329 ☐ Navigation & Guidance Equipment/Systems
330 ☐ Oceanography & Support Equipment
331 ☐ Office & Business Machines
332 ☐ Television Systems/Broadcast Equipment
333 ☐ Television Receivers, Consumer Electronics, Appliances
334 ☐ Test, Measurement, & Instrumentation Equipment
335 ☐ Transportation, Commercial Signage
336 ☐ Other *(please be specific)*

_____

4. What is your purchasing influence?

410 ☐ I make the final decision.
411 ☐ I strongly influence the final decision.
412 ☐ I specify products/services that we need.
413 ☐ I do not make purchasing decisions.

5. What is your highest degree?

510 ☐ A.A., A.S., or equivalent
511 ☐ B.A., B.S., or equivalent
512 ☐ M.A., M.S., or equivalent
513 ☐ Ph.D. or equivalent

6. What is the subject area of your highest degree?

610 ☐ Electrical/Electronics Engineering
611 ☐ Engineering, other
612 ☐ Computer/Information Science
613 ☐ Chemistry
614 ☐ Materials Science
615 ☐ Physics
616 ☐ Management/Marketing
617 ☐ Other *(please be specific)*

_____

7. Please check the publications that you receive personally addressed to you by mail (check all that apply):

710 ☐ *EE Times*
711 ☐ *Electronic Design News*
712 ☐ *Solid State Technology*
713 ☐ *Laser Focus World*
714 ☐ *IEEE Spectrum*

☐ I wish to join SID. Twelve-month membership is $100 and includes a subscription to *Information Display Magazine* and on-line access to the monthly *Journal of the SID*.

☐ I wish only to receive a **FREE** subscription to *Information Display Magazine* (U.S. subscribers only). Questions at left must be answered.

Signature _____

Date _____

Name _____

Title _____

Company _____

Department/Mail Stop _____

Address _____

_____

City _____

State _____ Zip _____

Country _____

Phone _____

E-mail _____

☐ Check here if you do not want your name and address released to outside mailing lists.

☐ Check here if magazine to be sent to home address below:
(business address still required)

_____

_____

_____

1/10

NO POSTAGE
NECESSARY
IF MAILED
IN THE
UNITED STATES

BUSINESS REPLY MAIL

FIRST-CLASS MAIL PERMIT NO 692 CAMPBELL CA

POSTAGE WILL BE PAID BY ADDRESSEE

ATTN: JENNY BACH
SOCIETY FOR INFORMATION DISPLAY
1475 S BASCOM AVE STE 114
CAMPBELL CA 95008-9901

fold here

tape here